Bi-Directional DC/DC Buck-Boost Converter for Automotive Applications

[1]Dabhi Ravi K, [2]Rital R. Gajjar, [3]Gunjan J. Tetar [4]Mayank Vyas
[1]PG Student, [2]Associate Professor, [3]Assitant Professor [4]PG Student
[1]Dept. of Electrical Engineering Parul Institute of Technology Vadodara, Gujarat, India
[1]ravi.ele007@gmail.com , [2]ritalgajjar@gmail.com , [3]gujantetar@gmail.com
[4]mayankvyas.er@gmail.com

***Abstract*— As the development in car, electronics and automatic parts has the capacity of current 14V system no longer meets the demand of on board devices. An upgrade is imminent in order to be backward compatible with the existing system (48v) and not to introduce extensive modification; a dual 48/220V system is being developed as a compromising solution. Based on this new system, this project deals with the new bi-directional DC/DC converter. This new converter is able to conduct closed loop control depending on current direction without changing the hardware control system of the vehicle. This bi-directional DC/DC converter basically uses a combination of Buck and Boost converter; so that it can provide voltage to both types of loads, i.e. 48Volt loads and 220Volt loads as well, without affecting the existing system. Conventional converter has some disadvantages like higher switching losses complex system. To overcome this problems proposed converter is introduced to achieve advantages like low switching losses, simple control and compact in size. Switching losses are reduced by using the soft switching techniques.**

***Index Terms*—Battery, Inverter, Bidirectional Buck-Boost Converter**

I. INTRODUCTION

A DC-DC converter converts the voltage switching DC to DC directly and simply as a DC converter. DC converter is equivalent to AC transformer ratio of a continuously variable rotation. It can be used to step down or step up a source of DC voltage, such as a transformer. DC converters are widely used to control the traction motor in electric cars, forklift trucks and transporters mines. They offer high efficiency, good throttle control and fast response. They can be used in the regenerative braking of motors to return the power supply again. This attribute translates into energy savings for transport systems with frequent steps.

A DC-to-DC converter is an electronic circuit which converts a source of direct current (DC) from one voltage level to another. It is a class of power convert DC to DC converters is important in portable electronic devices such as cellular phones and laptop computers, which are supplied with power from batteries primarily. Such electronic devices often contain several sub circuits, each with its own voltage level requirement different from that supplied by the battery or an external supply. Additionally, the battery voltage declines as its stored power is drained. Switched DC to DC converters offer a method to increase voltage from a partially lowered battery voltage thereby saving space instead of using multiple batteries to accomplish the same thing Bidirectional dc-dc converters allow power flow between two dc sources in either direction as shown in Fig. 1. They can reverse the direction of current flow, and thereby power flow while maintaining the voltage polarity of both source ends unchanged. Due to such good features, bidirectional dc-dc converters are being increasingly used in applications such as battery charger and discharger, fuel cell applications, dc uninterruptible power supply, aerospace power systems and motor drives. Bidirectional dc-dc converters for use in battery charger and discharger are not only to control the battery charging and discharging current, but also to regulate the output voltage of discharger to a predetermined value when again using the stored energy in the battery. In that case, if unidirectional dc-dc converter is adopted instead of bidirectional converter, two separate unidirectional converters should be provided for either direction.

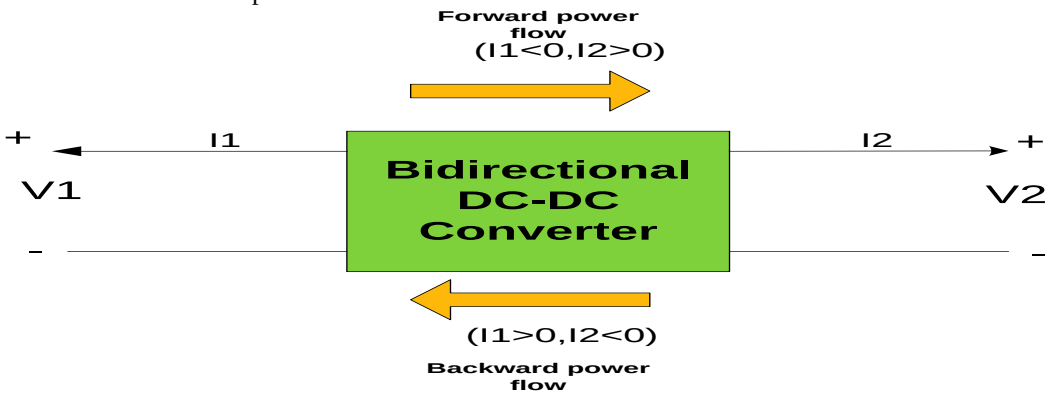

Fig.1 Illustration of bidirectional power flow

Bidirectional DC DC converters can be classified into two categories

- Non-Isolated Bidirectional DC DC converters
  - Buck
  - Boost
  - Buck-Boost
  - Cuk
- Isolated Bidirectional DC DC converters
  - Half-Bridge
  - Full-Bridge
  - Fly-Back
  - Forward
  - Push-Pull

II. BASIC BLOCK-DIAGRAM AND OPERATION PRINCIPLE OF THE DC/DC CONVERTER

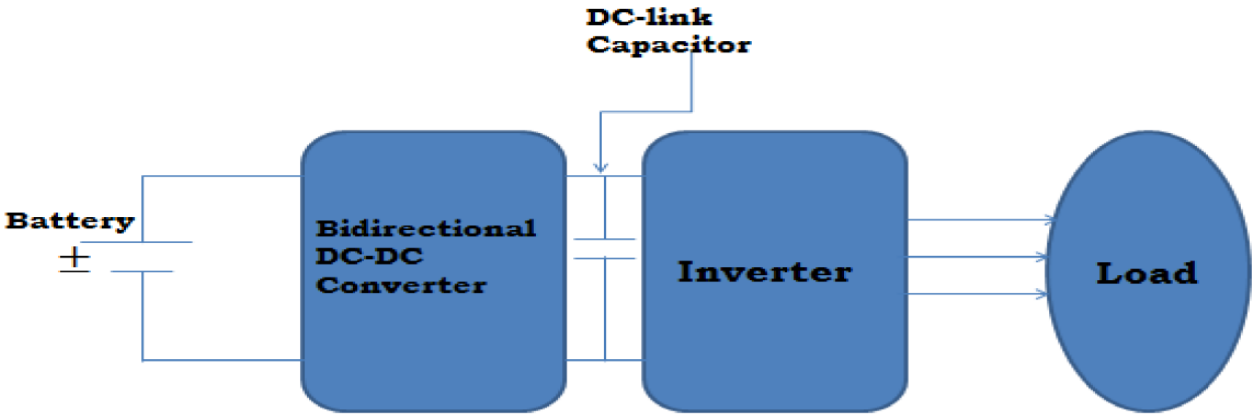

Fig 2 Basic Block-Diagram And Operation Principle Of The Dc/Dc Converter

Bi-directional DC/DC converter has gradually gained interests in both industry and academic world of power electronics, which can perform as the transaction platform of different voltage levels and make management of the power of two voltage level. It has a wide scope in the application of automation electronics, especially in modern day cars, solar photo voltaic technology and wind power generation, etc.

Here 48 Volt battery is used as source and Resistive is selected as Load. Bidirectional DC-DC Converter is used to step up or step down voltage. when direction of flow is from source to load at that time Bidirectional DCC-DC Converter performs Boost operation and o/p of converter is fed to Inverter. Inverter is used to convert DC-AC and o/p AC is given to Load.

When load works as generator at that time anti parallel diode across inverter switches works as rectifier and produces pulsating Dc o/p. this pulsating DC is converted into pure DC by using capacitor and DC o/p is fed to Bidirectional DCC-DC Converter to step down voltage and to recharge battery.

III. PROPOSED CIRCUIT OF BIDIRECTIONAL DC-DC CONVERTER

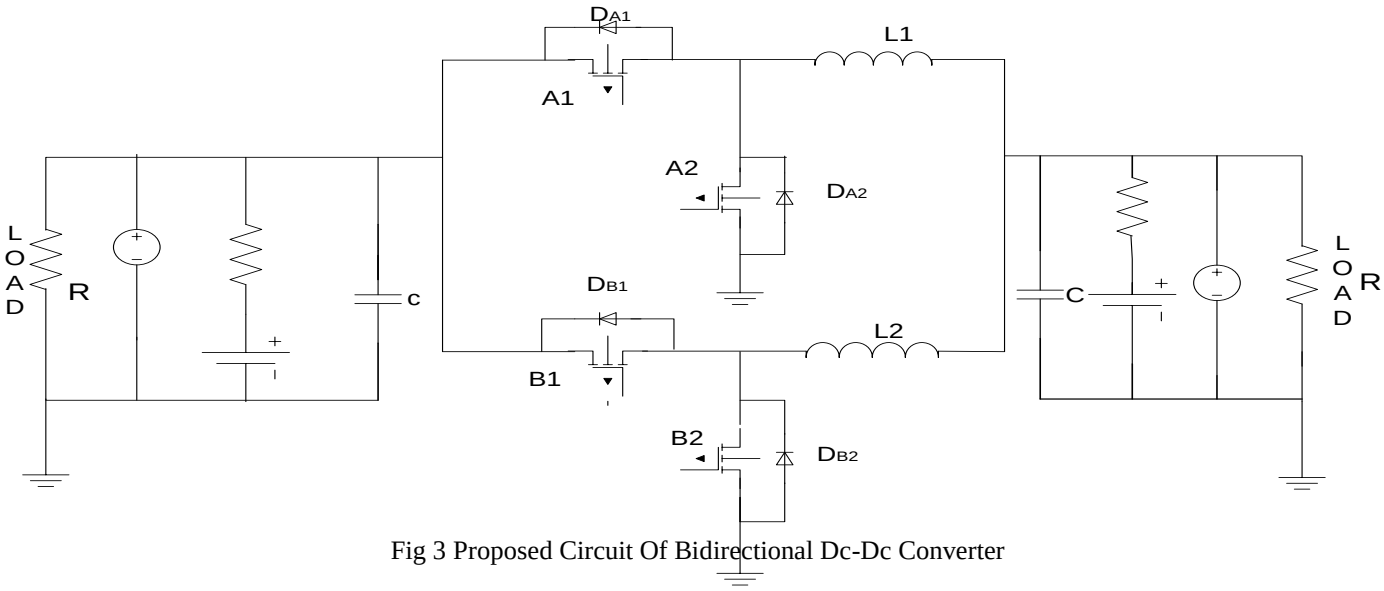

Fig 3 Proposed Circuit Of Bidirectional Dc-Dc Converter

When power flow from right to Left, both the switches A2 and B2 turn on. direction of flow of current is 48 volt battery source to L1/L2, A2/B2,GND to battery. at this time indictor store energy.When A2/B2 turn off at that time inductor energy is added to the source and fed to load. direction of flow of current is battery source to L1/L2 to Da1/a2 to load to GND to source.load having voltage that is double than input voltage.means source voltage+Inductor voltage.

When power flows from left to right at that time switch A1 and A2 turn on/off at perticulat time of full cycle. When A1/B1 turn on, source is connected to the load and direction of flow of current will be Source to A1/B1 to L1/L2 to Load to GND to Source. When both the switches are off at that time load current freewheels through Diode Da2 and Db2. so actual direction of current is L1/L2 to Load to Diode Da2/Db2 to inductor. so voltage reduces from the 230 to 48 v DC.

IV. SIMULATION AND RESULTS

[1]Simulation of Bidirectional DC-DC Converter

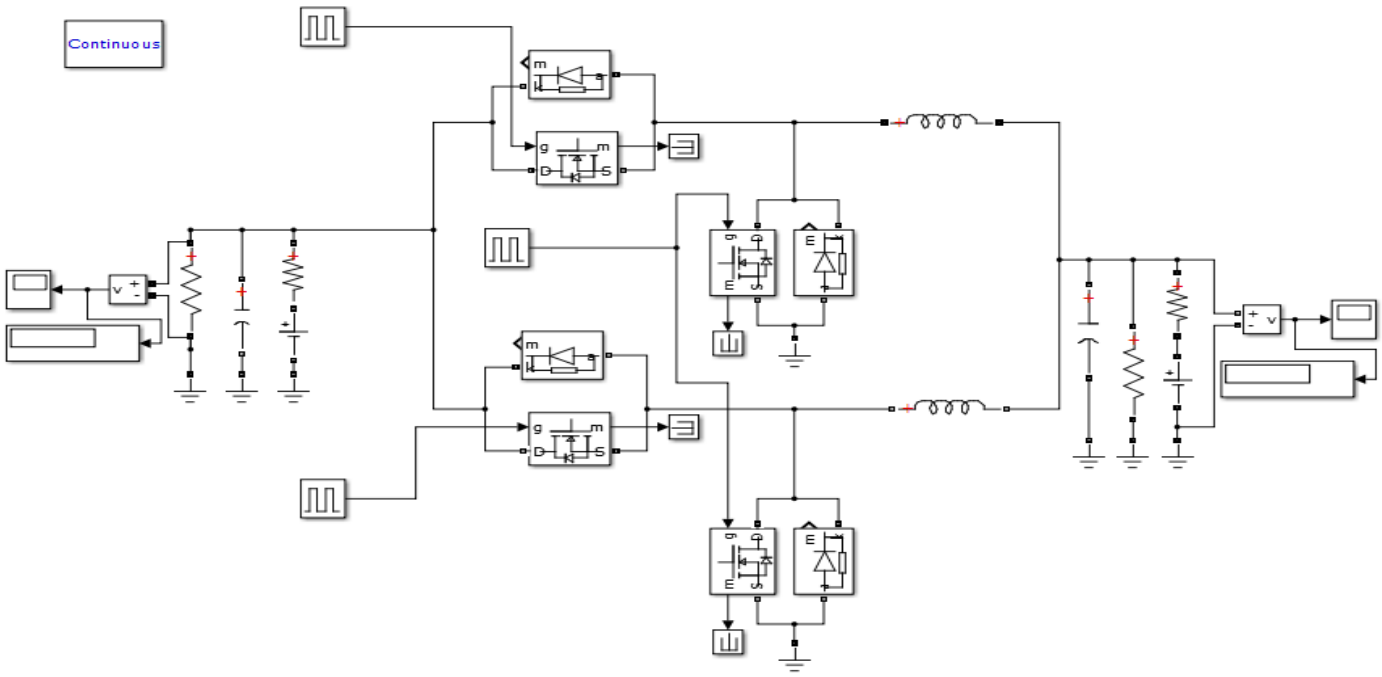

Fig4 Simulation of Bidirectional DC-DC Converter

[2]Simulation of Boost Converter

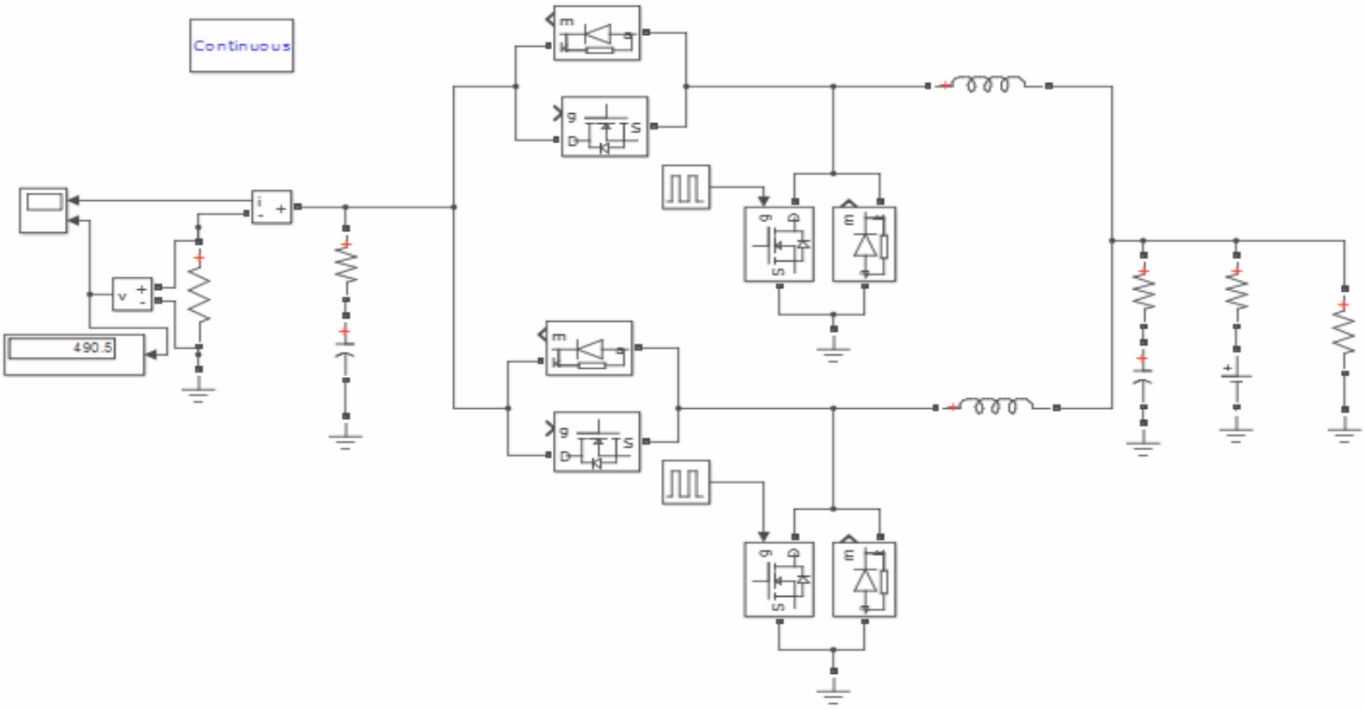

Fig 5 Simulation of Boost Converter

[3]Waveform of Voltage And Current[Boost Converter]

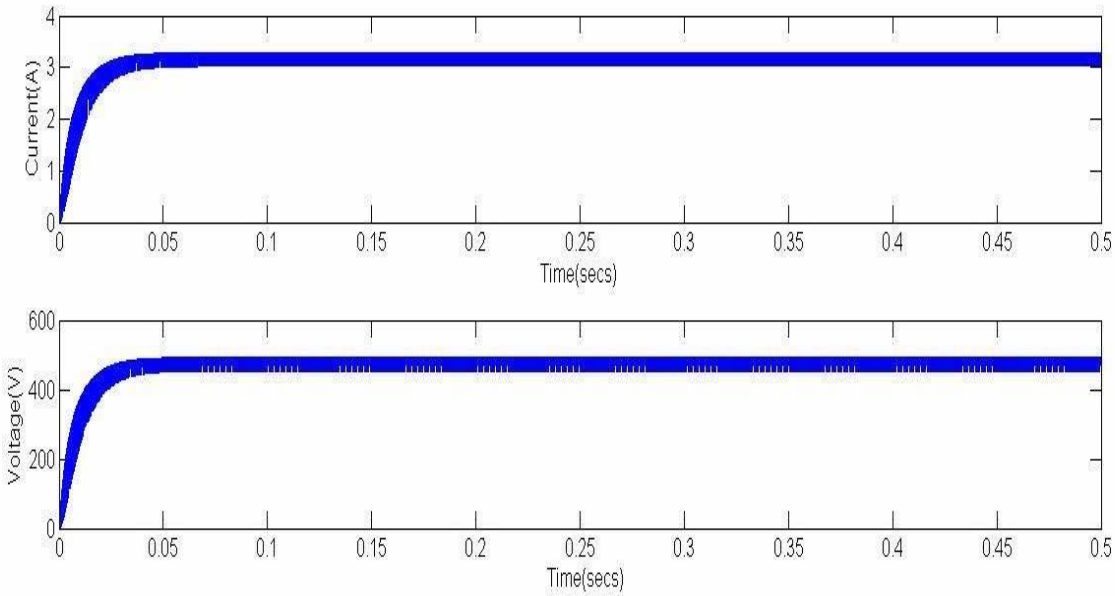

Fig 6 Waveform of Voltage And Current[Boost Converter]

[4]Simulation of Buck Converter

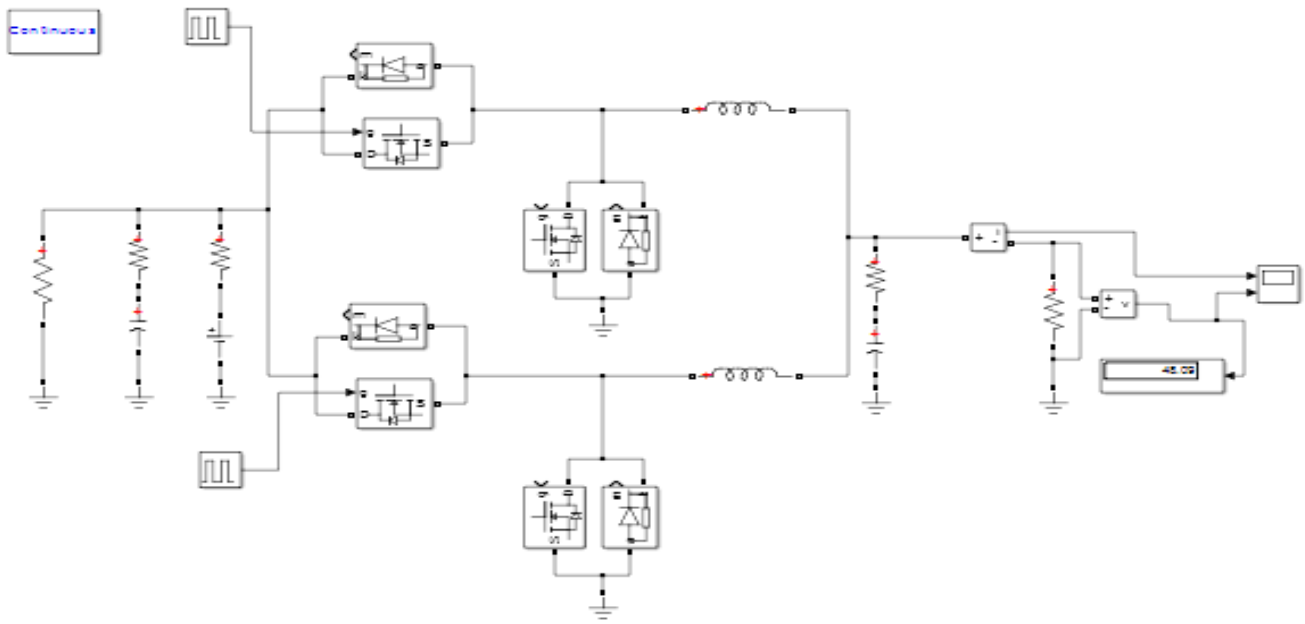

Fig 7 Simulation of Buck Converter

[5]Waveform of Voltage And Current[Buck Converter]

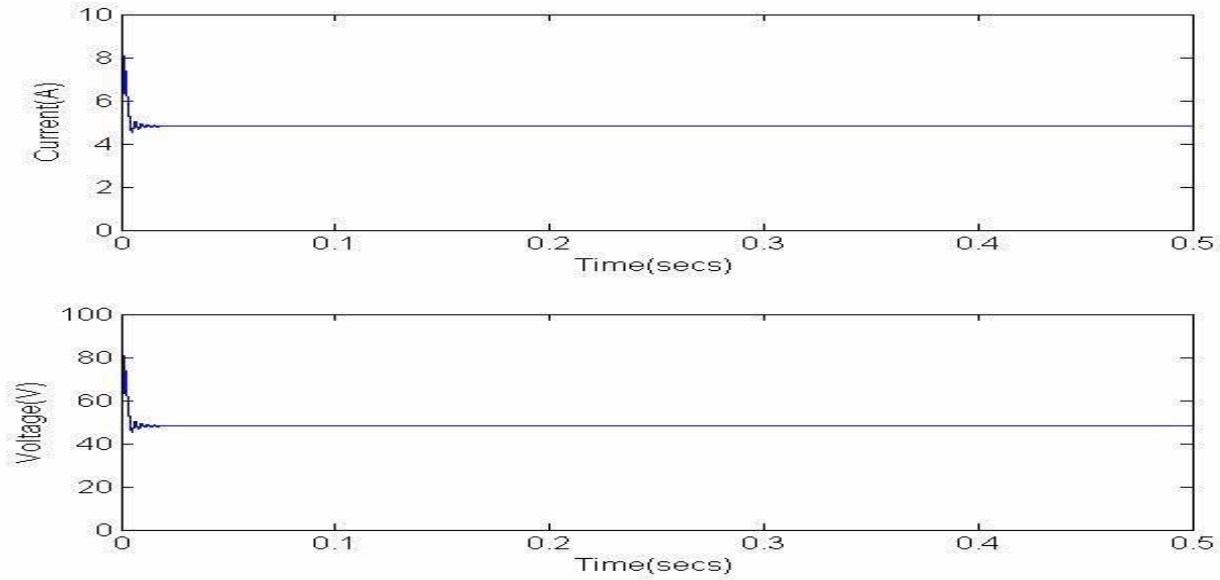

Fig 8 Waveform of Voltage And Current[Buck Converter]

[6]Simulation of Boost Converter and Inverter Combination:

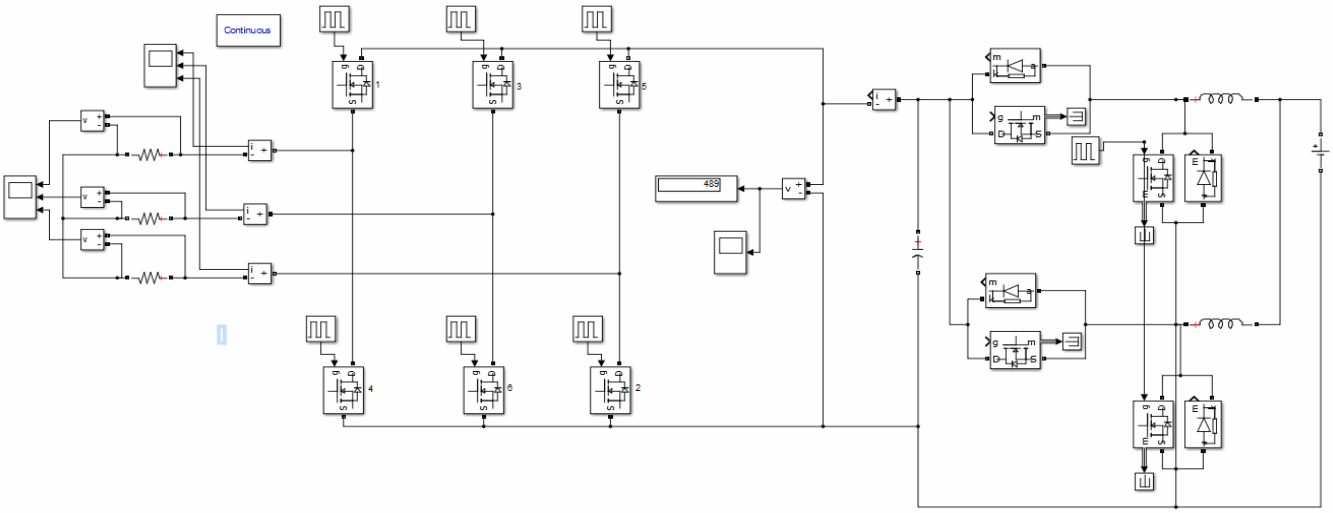

Fig 9 Simulation of Boost Converter and Inverter Combination:

Voltage of battery is step up to particular voltage required to the DC Link capacitor and than DC voltage is converted to the AC voltage by using inverter. Inverter works in 150 conduction and each switch works for 150 degree out of 360. each switch have 60 degree phase delay from each other. 150 degree conduction having batter than 120 and 180 conduction mode.

[7]Waveforms of three phase Voltage:

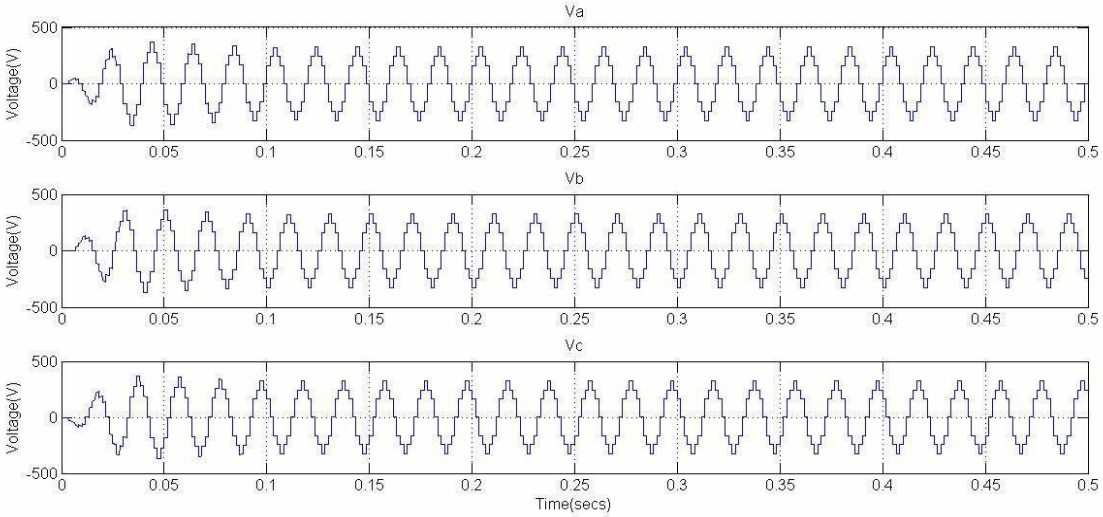

Fig10:Waveforms of three phase Voltage:

[8]Waveforms of three phase Current:

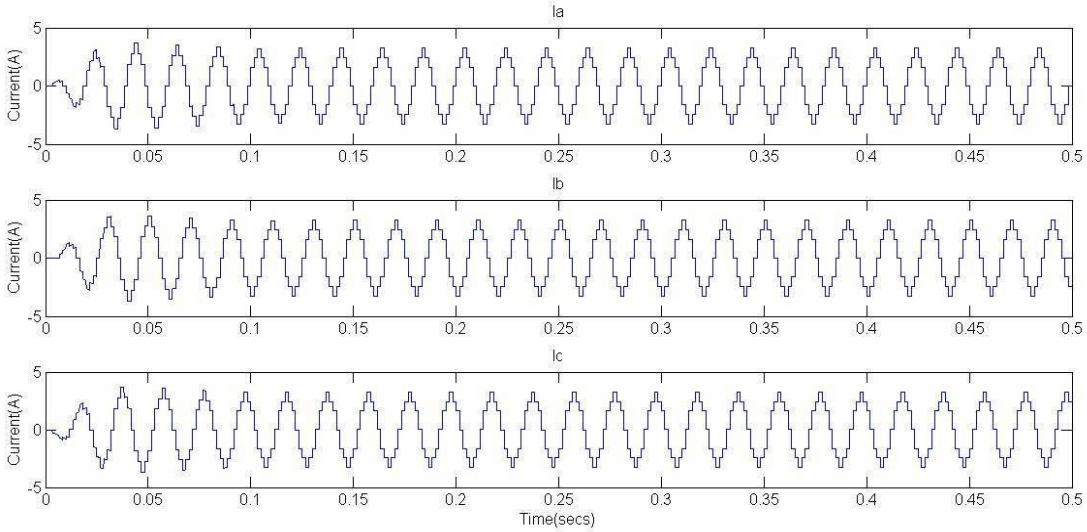

Fig 11 Waveforms of three phase Current:

[9]Waveforms of DC-link Voltage:

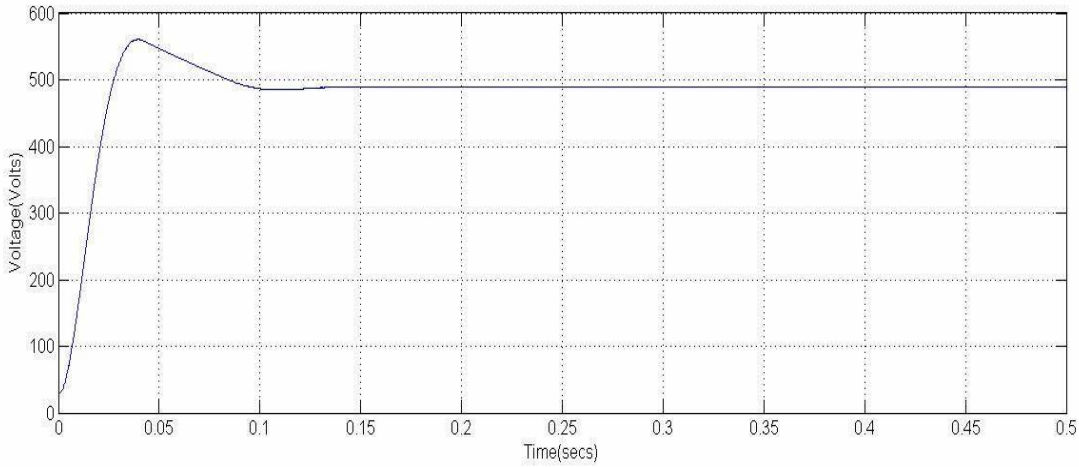

Fig 12 Waveforms of DC-link Voltage

[10]Simulation of Buck Converter and Inverter Combination:

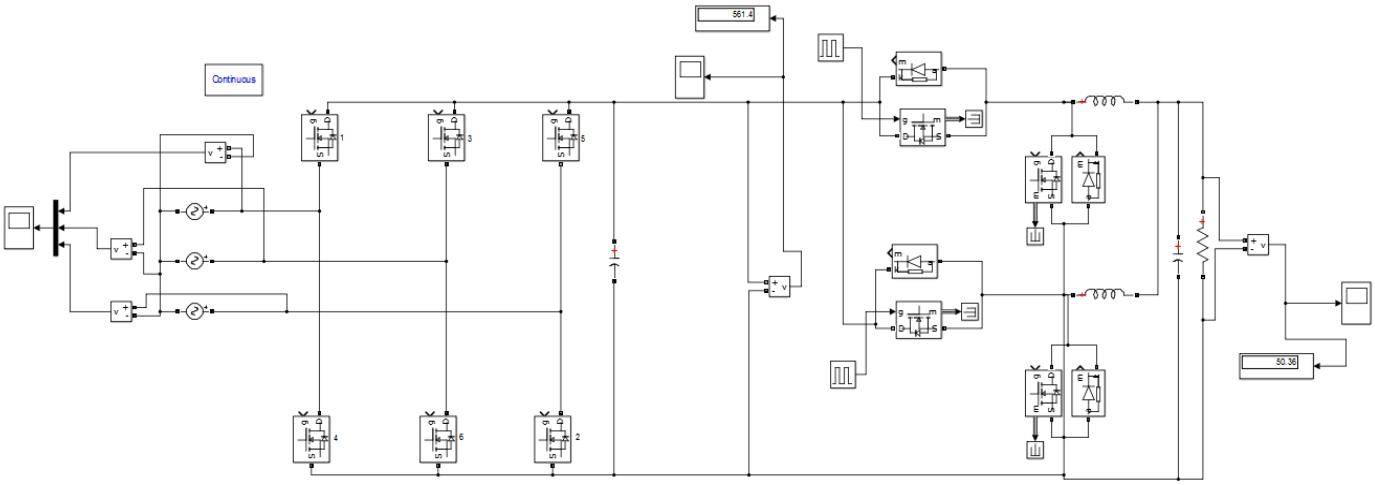

Fig 13 Simulation of Buck Converter and Inverter Combination

When load is work as source at that time diode across inverter switch work as rectifier and produce pulsating DC o/p. this pulsating DC is converted into pure DC by using capacitor filter. this will step down using the buck converter to charge battery.

[11]Waveforms of three phase Voltage:

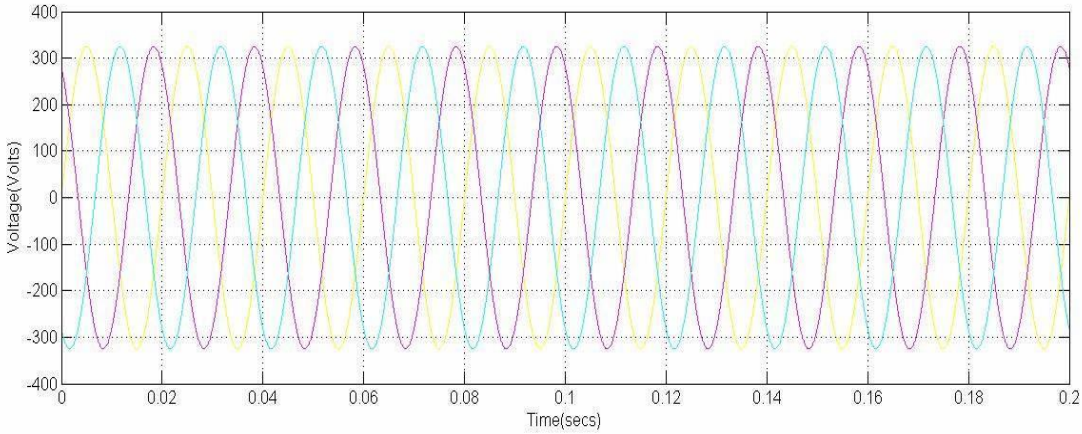

Fig 14 Waveforms of three phase Voltage:

[12]Waveforms of DC-link Voltage:

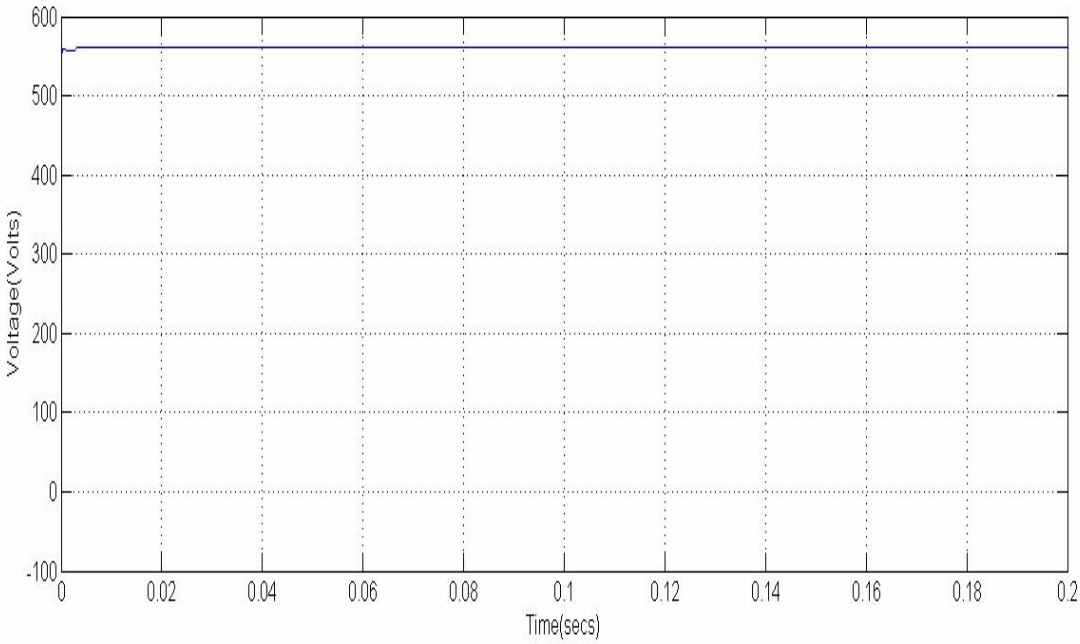

Fig 15 Waveforms of DC-link Voltage:

[13]Waveforms of Buck Converter Output Voltage:

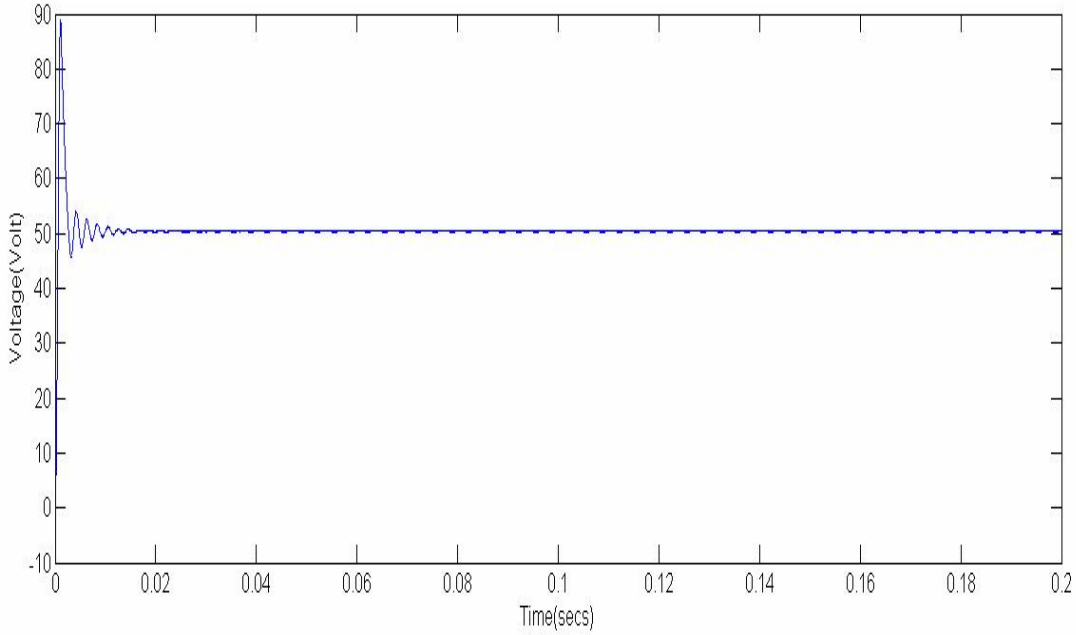

Fig 16 Waveforms of Buck Converter Output Voltage:

CONCLUSION

In this paper, bidirectional dc-dc buck boost converter working and simulated results have been discussed. simulation is done in MATLAB simulink environment. It has a wide input voltage range. The results are presented for boost mode and buck mode. it has ability to provide voltage as per desired ration in both mode. A proposed algorithm can be used in many applications like hybrid vehicles, uninterrupted power supplies, renewable energy and dc motor drives.

REFERENCES

[1] Debolina Dey, Gunjan J.Tetar ,'' Automatic buck-boost converter for automobileuse", International Journal of Advanced Research in Electrical, ElectronicsandInstrumentation Engineering, Vol. 3, Issue 1, January 2014

[2] Dr. Prasad N. Enjeti,'' Bi-directional Multi-phase DC-DC Converter with ZVS for Dual Bus Automotive Applications"

[3] Santhosh kumar katkuri, ravi teja boppa & talasila sudeepya,'' implementation of a new bidirectional dc–dc converter and its steady state analysis", International Journal of Electrical and Electronics Engineering Research (IJEEER) ISSN 2250-155X Vol. 3, Issue 4, Oct 2013, 161-170

[4] Jung-Hyo Lee, Doo-Yong Jung, Taek Kie Lee, Young-Ryul Kim and Chung-Yuen Won," Regenerative Current Control Method of Bidirectional DC/DC Converter for EV/HEV Application", J Electr Eng Technol Vol. 8, No. 1: 97-105, 2013

[5] L.Jourdan, JL.Schanen, J.Roudet,"Design Methodology for Non Insulated DC-DC Converter:Application to 42V-14V "Powernet", 2002 IEEE.

[6] Premananda Pany, R.K. Singh, R.K. Tripathi,"Bidirectional DC-DC converter fed drive for electric vehicle system ",International Journal of Engineering, Science and Technology Vol. 3, No. 3, 2011, pp. 101-110

[7] Chang-Gyu Yool,Woo-Cheol Lee,KyuChan Lee, Inyoung Suh," Current Mode PWM Controller for a 42V/14V bidirectional DC/DC Converter"

[8] M.priyanka,G.Naveen,Mr.M.Kondalu," Design and Simulation OF Closed Loop Bidirectional DC–DC Converter Fed DC Motor", International Journal of Power System Operation and Energy Management ISSN (PRINT): 2231 – 4407, Volume-4, Issue-2, 2013