Research Paper on Image Restoration using Decision Based Filtering Techniques

[1]Ankita, [2]Er. Lavina
[1]Student, [2]Assistant Professor
[1]Computer Science Engineering
[1]Global Research Institute of Management & Technology, Radaur, India

***Abstract* - Images corrupted by impulse noise are frequently originated in routine practice. This problem accumulate in digital images because of channel decoded damages, signals dyeing down during transmission, when transmit in a communication channel, noises from video sensor and other partitions. Before the invention of computers and software such as Photoshop, most of the photo restoration was done by restoration experts. These were applied directly to the damaged photo and consisted mainly of air brushing technique over the damage. A new decision based filtering technique which is combination of K-means and PCA is proposed for reducing the unwanted noises and thus provides better quality image. Proposed filter provide better result in comparison to other filtering techniques.**

***Index Terms* - Digital Image Processing, peal signal to noise ratio. (key words)**

I. INTRODUCTION

Image processing is a methodology to convert a picture into digital type and perform some operations on that, so as to induce an enhanced image or to extract some helpful data from it. It's a kind of signal dispensation within which input is digital image, like video frame or photograph and output is also image or characteristics related to that image. Mainly Image process system contains pictures as two dimensional signals whereas applying already set signal process strategies to them[17].

An image is formed on the image plane of the camera and then measured electronically or chemically to produce the photograph. Any image acquired by a tool is prone of being degraded by the surroundings of acquisition and transmission[11]. Degraded image is the result of various types of noises introduced in the image. These noises reduces the quality of the image.
Degradation in image can be result of various issues like :

- Sharpness determines the quantity of detail a picture will convey. System sharpness is stricken by the lens (design and malfunctioning feature, focal length, aperture, and distance from the image centre). Here, sharpness is stricken by camera shake, focus accuracy, and region disturbances (thermal effects and aerosols). Lost sharpness may be regenerated by sharpening, however sharpening has limits. Over-sharpening, will degrade image quality.
- Tone reproduction is the association between scene light and the regenerated image brightness.
- Contrast, additionally referred to as gamma, is that the slope of the tone regeneration curve during a log-log space. High contrast typically involves loss of dynamic range — loss of detail, or clipping, in highlights or shadows.
- Colour accuracy is vital however ambiguous image quality issue. Several viewers like increased colour saturation; the foremost correct colour is not essentially the foremost pleasing. But it's necessary to measure a camera's colour response: its colour shifts, saturation, and therefore the efficiency of its white stability algorithms.
- Distortion is an abnormality that causes straight lines to curve. It's often tough for architectural photography and metrology (photographic applications involving measurement). Distortion is often noticeable in cheap quality cameras, that includes cell phones, and low rate DSLR lenses. It's typically easy to envision in wide angle photos. It are often currently be corrected in softwares.
- Vignetting, or low-light slump, darkens pictures close to corners. It is often noteworthy with wide angle lenses.
- Exposure accuracy is an issue with absolutely automatic cameras and with video cameras where there's very little or no chance for post-exposure tonal adjustment. Few of them even have exposure memory: exposure might change after bright or dark objects appear during a scene.

To revive a degraded/distorted image to its original data and quality, we referred to this process as Image Restoration . The main motive of restoration is to boost the standard of a digital image that has been degraded as a result of varied kinds of noise or blur superimposed into it. Before the advent of computers and software, most photograph restoration was done by restoration consultants. Repairs were applied on to the damage photographs and consisted principally of air brushing over the damage. This is often still the popular technique for valuable historical photos. This work is incredibly high priced and not typically needed by the common person who wish to repair previous broken family photos. Luckily, it's currently possible through the employment of computers and software, to revive nearly any photograph at an affordable costs rather than operating directly on the broken photograph, a replica is formed employing a scanner. Once all repairs are created to the copy by using computer software, a brand latest print will be created. the ultimate digital photograph file of the repaired photograph will be saved as an repository copy and replaces requirement for a negative [8].
Image Restoration refers to a group of strategies or techniques that aim to remove or reduce the degradations that have occurred whereas the digital image was being obtained. All natural pictures once displayed have some sort\ of degradation. It deals with

rising the looks of a picture. The Image is corrected mistreatment totally different with rising the looks of a picture. The Image is corrected using various filters like median filter, hybrid filter, decision filters etc so as to revive a picture to its original forms.
The image degradation process can be modeled by the following equation [2]:

$$g(x, y) = H(x, y).f(x, y) + \eta (x, y) \qquad (1.1)$$

Where, H (x,y) degradation function represents a convolution matrix that models the blurring that many imaging systems introduce. For example, camera defocus, motion blur, imperfections of the lenses all can be modeled by H. The values g(x, y), f(x, y), and ŋ(x, y) represent the observed or degraded image, the original image or input image and the additive noise respectively.

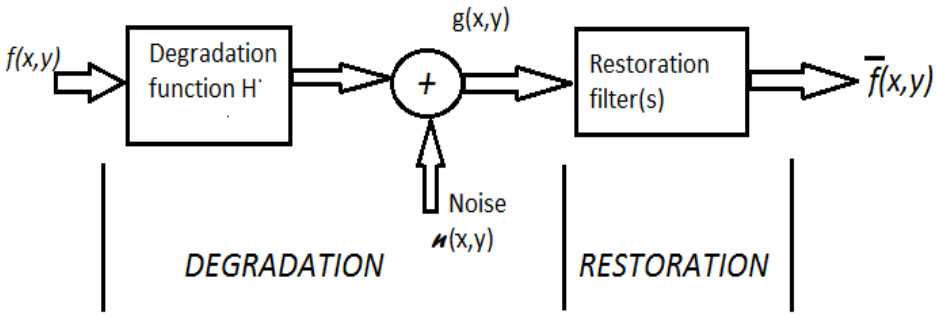

Fig. 1.1 Degradation and Restoration Model

Applications of Image Restoration -

- The initial application of digital image restoration within the engineering community was within the space of astronomical imaging. The astronomical imaging degradation downside is usually characterised by Poisson noise, mathematician noise etc.
- Restoration has been used for mammograms, filtering of Poisson distributed film-grain noise in chest X-rays and digital angiographic pictures, and for the removal of additive noise in resonance Imaging.
- Another necessary application of restoration technique is to revive aging and deteriorated films. The film restoration is usually linked to digital techniques area unit wont to eliminate scratches and dirt from previous movies and conjointly to colour black and white films.
- The increasing space of application for digital image restoration is that within the field of image and video writing. As techniques area unit developed to enhance writing potency, and cut back the bit rates of coded pictures abundant has been accomplished to develop ways in which of restoring coded pictures as a post-processing step to be performed once decompression.
- Digital image recovery has conjointly been wont to restore blurred X-ray pictures of craft wings to enhance aeronautic federal management procedures. It's for the recovery of the motion evoked within the gift frame or composite effects, and is mostly used, restoring tv pictures blurred uniformly.

II. LITERATURE REVIEW

Rithu James (2015) [21] The author proposed a simple, capable Patch based and Block based image denoising algorithms, where the degraded image patches are represent using Principal Components and Singular Values is presented. From the conventional Principal Component Analysis (PCA) based on denoising algorithm two improved versions of denoising algorithm were made by using patch based and block based Singular Value Decomposition (SVD). These techniques were found to work very well on images affected by different kinds of noises. A comparison between three methods using a quantitative analysis in terms of PSNR and RMSE is done.

Pooja Kaushik (2012) [9] The author compared the various image sweetening techniques by victimisation their quality parameters (MSE & PSNR) & planned a replacement erosion sweetening technique. this system provides higher result than alternative techniques and their PSNR price is high & MSE is low. The experimental results show that the planned sweetening technique provides higher results.

Gabriela Ghimpeteanu (2016) [3] Author contemplate a picture decomposition model that has a completely unique framework for image denoising. The model computes the parts of the image to be processed in an exceedingly moving frame that encodes its native pure mathematics (directions of gradients and level lines). Then, the strategy we have a tendency to develop is to denoise the parts of the image within the moving enclose order to preserve its native pure mathematics, which might are a lot of affected if process the image directly. Experiments on a full image information tested with many denoising ways show that this framework will offer higher results than denoising the image directly, each in terms of Peak S/N and Structural similarity index metrics.

Gitam Shikkenawis (2016) [4] Author derives mathematical foundation for second OLPP. The planned technique is employed for image denoising task. Recent progressive approaches for image denoising work on 2 major hypotheses, i.e., non-local self-similarity and thin linear approximations of the info. vicinity protective nature of the planned approach mechanically takes care of self-similarity gift within the image whereas inferring thin basis. a world basis is adequate for the whole image. The planned approach outperforms many progressive image denoising approaches for gray-scale, colour, and texture pictures.

Nivedita Thakur (2011) [8] Author introduces new objective colour image quality live in spatial domain is planned that overcomes the limitation of those existing ways considerably, is simple to calculate and applicable to varied image process applications. The planned quality live has been designed as a mixture of 4 main factors: brightness similarity, structure correlation, edge similarity, and colour similarity. This proposed index is mathematically outlined and in it HVS model is expressly utilized. Experiments on numerous image distortion sorts indicate that this index performs considerably better than alternative ancient error summation ways and existing similarity measures.

Jyoti Kamboj (2015) [7] Images corrupted by impulse noise are usually originated in routine practice. This problem accrue in digital images because of channel decode damages, signals dyeing down at the time of transmission, when transmit in a communication channel, video sensor's noises and other partitions. Author defined a new hybrid filter which is combination of median filter and decision or hybrid filter is proposed for remove unwanted noises and provide finest quality image. Projected filter provide best result as compare to other filter.

Anamika Maurya et. al. (2014) [1] Author offer a elliptical summary of most helpful restoration models .Different types of image restoration techniques like wiener filter, inverse filter, regularised filter, Richardson –Lucy algorithmic rule, neural network approach, wavelet primarily based approach, blind deconvolution or delineated and strength and weakness of every approach are known.

Geoffrine Judith.M.C (2011) [5] Author introduces a brand new call based mostly median filtering rule is conferred for removing impulse noise from digital pictures. Here, we tend to replace the impulse noise corrupted pixel by the median of the pixel scanned in four directions. The signal restoration theme of this filter adapts to the various impulse noise ratios whereas deciding Associate in Nursing applicable signal trained worker from a reliable neighbourhood. The experimental results of this filter applied on numerous pictures corrupted with the majority ratios of impulse noise favour the filter in terms of judgment and sound judgement than several of the opposite distinguished impulse noise filters.

Gurpinder Kaur Sivia et.al.(2014) [10] The author conferred novel and economical rule that mixes the benefits of filling in techniques. during this paper, "Hybrid Filling-in technique for image restoration" is conferred within which two filling-in techniques square measure accustomed restore the broken image. within the hybrid technique 1st Probabilistic Recovery Filling-in technique is enforced to search out the distortion within the pixels. during this technique corrupted and missing pixels square measure based in step with rarity of pixels and remodelled by victimization data from the encompassing pixels. once this approach the planned filling-in technique is enforced to revive the rip-roaring and distorted image within which GLCM is employed to scan the properties of image. This analysis can offer higher quality of results as compare to previous techniques.

III. PROPOSED WORK

3.1. Problem Formulation:

Noise in image is introduce due to many reasons like atmospheric disturbances, focus of the image etc. Image Restoration includes processes that decide to take away degradations/noise and restore the initial image. Restoration is distinguished from improvement in this degradation is thought as an external influence that's become distinguished image signal. Image noise is that the random variation of brightness or colour information in pictures made by the device and electronic equipment of a scanner or photographic camera. Image noise is taken into account as undesirable by-product of capturing image. The categories of noises are guassian noise, salt and pepper noise, speckle noise, brownian noise etc. There are different filtering techniques that are to be applied on image to make an image noise free. But such filtering techniques are not enough to remove the noise from the image because one filter is not sufficient, thus a combination of hybrid filters are required to make an image noise free.

3.2. Proposed work:

Impulse noise detector- Impulse noise detector detect the impulse noises in a picture. These is return through part disturbance. Impulse noise could be a class of noise which incorporates unwanted sharp sounds. Noises of this kind typically caused by magnetism interference, scratches on the recording disks, and unwell synchronization in recording. Impulse noise could also be a special style of noise, which can have varied causes. Impulse noise is defined by short, abrupt alterations of the colours values among the image. In several applications it's caused by magnetism fields, transmission errors, wheezy sensors or communication channels. etc

Median filter- Median filter could be a straightforward rank choice filter that output the median of the pixels contained in its filtering window. In signal process, it's usually desirable to be able to perform some quite noise reduction on a picture or signal. The median filter could be a non- linear digital filtering technique, usually accustomed take away noise. Such noise reduction could be a typical pre-processing step to enhance the results of later process. Median filtering is incredibly wide employed in digital image process it preserves edges whereas removing. Mainly median filter run through the signal entry by entry, exchange every entry with the median of neighbouring entries. For a good range of entries, there's quite one potential median. Median filter, the foremost prominently used impulse noise removing filter, provides higher removal of impulse noise from corrupted photos by exchange the individual pixels of the image because the name suggests by the median of the gray level of the pixels from a particular neighbourhood.

Decision filter- This filter overcome the remaining limitation of median filter. It addresses the restrictions of median filter, RAMF among that alone median values area unit used for the replacement of the corrupted pixels. The new formula at first detects the impulse noise among the image. The corrupted and uncorrupted part among the image area unit detected by checking the picture value against the foremost and minimum values among the window selected . The decision based mostly filter is featured to revive impulse corrupted digital photos even in very corrupted environments.

Integrated output- It shows combination of the output of each median filter and call filter. Outputs of median filters and decision based filtering derive combination output. From the outputs we compare PSNR value and thus got an enhanced image.

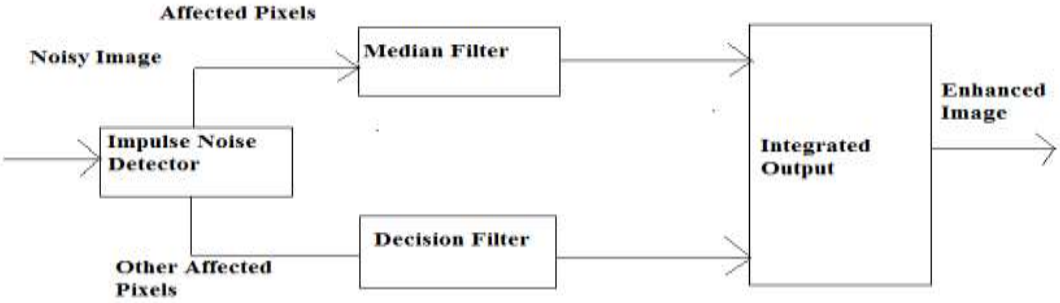

Figure 3.1. Model to enhance the image quality

Table 1 Table Type Styles

IV. RESULT AND ANALYSIS

Fig. 4.1. Noisy Image

Figure 4.2. Grey scale image

Figure 4.3. Result Image

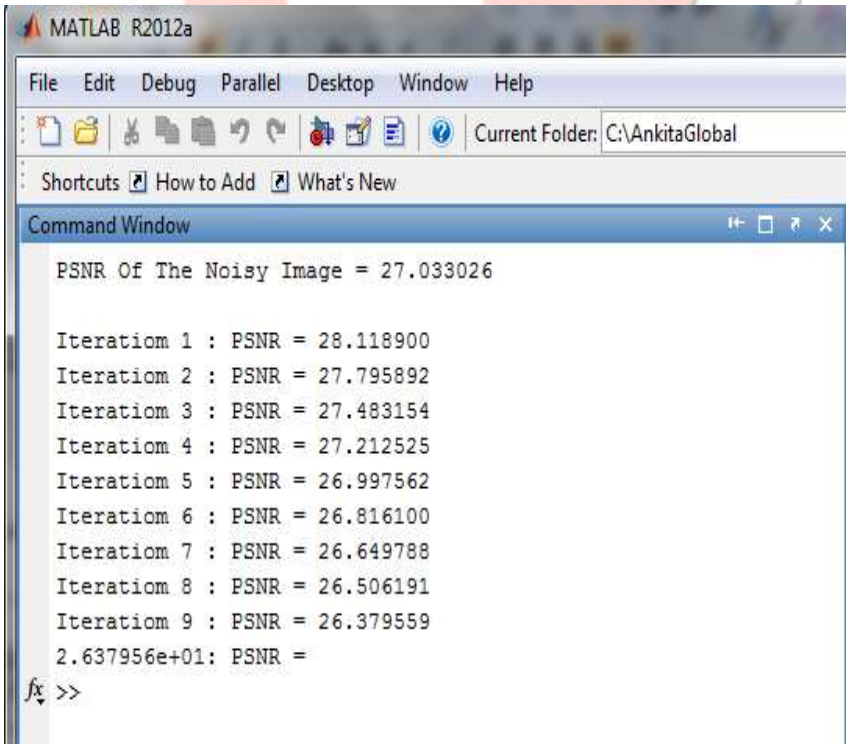

Figure. 4.4. PSNR of noisy image and PSNR after applying decision based filtering technique

Table 4.1. Comparison of average values using two different filters

FILTER NAME	PSNR VALUE	RESULT
Hybrid Median Filter (7)	29.62	Good
Decision based filtering technique	34.42	Better

GRAPH:

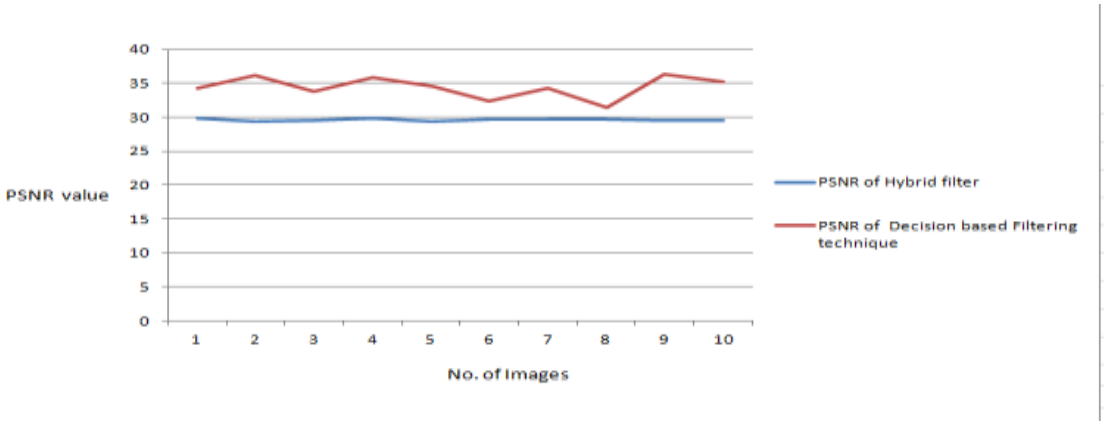

Graph showing the comparison between the values by using a hybrid filter and decision filter. PSNR values calculated by using hybrid filter are less than as compared to decision filter.

CONCLUSION

A particular unwanted component like noise, to lower the value of noise is the actually working of filtering, or to increase the value at a particular set of function like edges. White Gaussian noise reduced by improved adaptive wiener filter, by ideal low pass filter noise suppressed and reduced, high-frequency information providing a smoothing effect to the image and image sharpening and extraction of high-frequency information such as edges provided by high pass filter. Good results on the basis of PSNR value are provided by hybrid median filter, Decision based filtering technique which is a combination of k-means and pca technique removes the limitation of hybrid filter and it show better result as compare to hybrid filter. Hybrid median filter provides good result but decision based technique gives better result.

REFERENCES

[1] Anamika Maurya, Rajinder Tiwari "A Novel Method of Image Restoration by using Different Types of Filtering Techniques", International Journal of Engineering Science and Innovative Technology, Volume 3, Issue 4, July 2014.
[2] Rithu James, Anita Mariam Jolly, Anjali C and Dimple Michael, "Image Denoising using Adaptive PCA and SVD", IEEE, 978-1-4673-6994-7, 2015 Fifth International Conferrence on Advances in Computing and Communications.
[3] Gabriela Ghimpeteanu, Thomas Batard, Marcelo Bertalmío, and Stacey Levine "A Decomposition Framework For Image Denoising Algorithms", IEEE transactions on Image Processing, Vol.25, NO.1,January 2016.
[4] Gitam Shikkenawis, Suman K. Mitra,"2D Orthogonal Locality Preserving Projection For Image Denoising", IEEE transactions on Image Processing, Vol.25, No.1, January 2016
[5] Geoffrine Judith.M.C. and N.Kumarasabapathy," STUDY AND ANALYSIS OF IMPULSE NOISE REDUCTION FILTERS", Signal & Image Processing : An International Journal (SIPIJ) Vol.2, No.1, March 2011
[6] Gurpinder Kaur Sivia and Amanpreet Kaur ," Image Restoration by Using Hybrid Filling-in Technique", International Journal of Computer Science and Information Technologies, Vol. 5 (5) , 2014.
[7] Jyoti Kamboj and Er. Suveg Moudgil," Implementation of Hybrid Median Filter Using Nural Network and Fuzzy Logic," International Journal of Emerging Research in Management &Technology ISSN: 2278-9359 (Volume-4, Issue-5) May 2015.
[8] Niveditta Thakur and Swapna Devi ," A New Method for Color Image Quality Assessment", International Journal of Computer Applications, Volume 15– No.2, February 2011.
[9] Pooja Kaushik and Yuvraj Sharma," Comparison Of Different Image Enhancement Techniques Based Upon PSNR & MSE", International Journal of Applied Engineering Research, ISSN 0973-4562 Vol.7 No.11 (2012).