A Review of AC-DC Fly back Converter for Variable Speed PMSM Drive for Power Quality Improvement

Amit Mendapara[1], Bharti Parmar[2], Devang Parmar[3]

Electrical Engineering Department, V.V.P. Engineering College, Gujarat Technological University, India

[1]amitmendapara35@gmail.com, [2]bbp.elect@gmail.com, [3]devangparmar@ymail.com

***Abstract*--This review paper provides a Simulation And Analysis Of AC-DC Fly back Converter which is operated in Discontinuous Conduction Mode (DCM) to feed supply to Vector Controlled PMSM Drive. In this operation also Improved Power Quality at supply current and voltage of PMSM Drive.**

***Index Terms*—Fly back Converter, PMSM Drive, THD, PF, DPF, DF, MOSFET, IGBT, etc.**

I. INTRODUCTION

The Permanent Magnet Synchronous Motor used to make low power rating application devices such as Refrigerator, Washing Machine, House-hold appliances, Medical Equipment, Wide speed range of servo drives and industrial robots. PMSM drives are used for its high efficiency, fast dynamic response and small size etc. For the operation of PMSM Drive first need to convert AC supply power to DC power using rectifier circuit and then DC power to variable magnitude and variable frequency AC power to feed PMSM. PMSM operates on two mode vector control and direct torque control. Here we are using vector control PMSM. Here for conversion of AC-DC we can not use simple rectifier circuit because in this circuit large value of capacitor is required which has drawn a large value of small narrow pulse current. Since we get the capacitor voltage variation is nearly constant. But due to this current we get the supply voltage poor in terms of high value of Total Harmonics Distortion (THD), low value of

Power Factor (PF), Displacement Factor (DPF), and poor Distortion Factor (DF). These large harmonic currents not only produce distortion but also produce conducted and radiated Electromagnetic Interference (EMI). This problem become more serious when all the devices are running in single phase supply [1-3]. Below Figure.1. shows PMSM drive directly connected to power supply system.

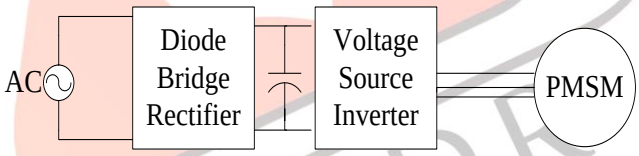

Figure.1. Basic Block Diagram of PMSM drive directly connected to Power Supply

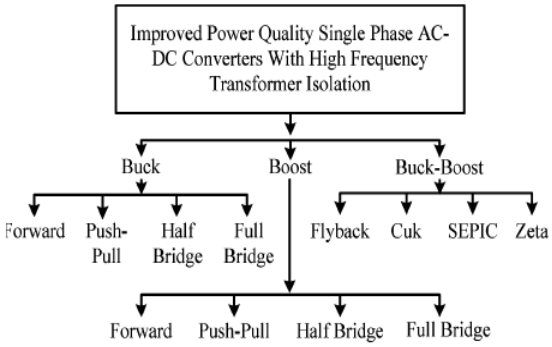

Figure.2. Classification of improved power quality single-phase AC-DC converters with HF transformer isolation.

This problem is reduced by using AC-DC converter instead of simple rectifier circuit. Many types of AC-DC converters are available. The classification of AC-DC converter is shown in Figure 2. It classified in three ways Buck, Boost and Buck-Boost. It again classified in subtypes. Buck consists of Forward, Push-Pull, Half bridge and Full Bridge. Same way Boost consist all Buck converter and Buck-Boost consist Fly back, Cuk, Sepic and Zeta converters [8]. Here we are using high frequency isolation AC-DC fly back Buck-Boost type converter because of the following reasons:

1. Push-Pull and Half bridge converter equal switching losses compared to single switch converters e.g. Fly back, Cuk, Sepic and Zeta converters because only one switch operates at a time, however they can be used for high power applications with cost of additional switch and associated circuitry.

2. Fly back converter and Zeta converter provides additional protection against over current and inrush current as compared to Cuk and Sepic converter topologies.
3. Fly back converter topology requires only a capacitor as an output filter and the Cuk converter topology requires smaller core, and has lower core and copper losses [8].

So that by connecting high frequency AC-DC fly back converter with PMSM drive we get improved quality of supply power for feeding PMSM drive.

II. SYSTEM CONFIGURATION

The complete block diagram is shown in Figure 3 and Figure 4. In Figure 3. AC-DC converter is operating in DCM with an input current in phase with an input AC supply voltage. This converter is design for 600w vector controlled PMSM drive. The regulated output DC voltage fed to the PMSM drive system as shown in Figure 4. Output of the isolated fly back converter is fed to the Voltage Source Inverter of vector controlled PMSM drive to control appropriate currents signals to stator winding of the motor. In this drive, a current controlled pulse width modulated (CC-PWM) VSI is used to control the speed of the drive. The VSI is made up of six active bi-directional switches IGBTs with freewheeling diodes. The motor is use position sensor for sensing the position of rotor. The rotor position in the form of two signals, which are the sine and cosine wave of rotor position angle (θ_r). The rotor speed (ω_r) of the motor is derived from position sensor and compared with the reference speed (ω_r*). The error in speed (ω_e) is processed in the PI speed controller, which generates the reference torque (Tk*). This reference torque is limited using a limiter and the limited reference torque (T_{ref}*) is used to generate torque component of reference q-axis current (i_q*). The direct axis current (i_d*), which is flux component of stator current, is obtained as function of the rotor speed of the motor. Both torque component (i_q*) and flux component of current (i_d*) are transformed to the stationary reference frame (i_a*, i_b*, i_c*) using inverse Park transformation, using limiter and where these currents along with sensed currents(i_a, i_b, i_c) are fed to CC-PWM VSI to determine the switching pulses for devices of VSI. In response to these switching signals, the VSI controls the winding currents of PMSM close their reference values, thereby controlling the speed of the motor in the desired manner.

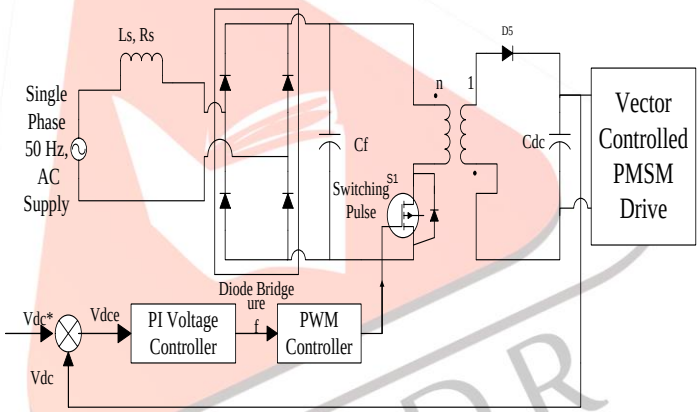

Figure.3. High frequency isolated AC-DC flyback converter feeding vector controlled PMSM drive.

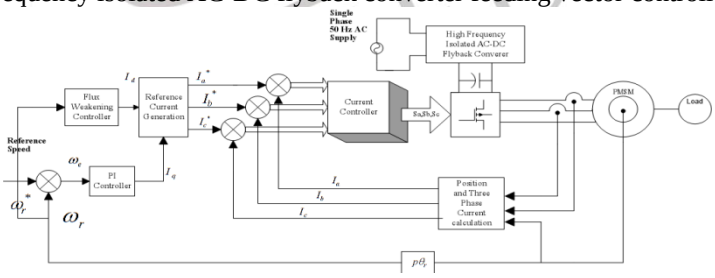

Figure.4. Vector control strategy of PMSM drive

III. OPERATION OF FLYBACK CONVERTER

An AC-DC Fly back converter operated in DCM for power factor correction of input supply. Figure.5 shows the equivalent circuit of AC-DC fly back converter.

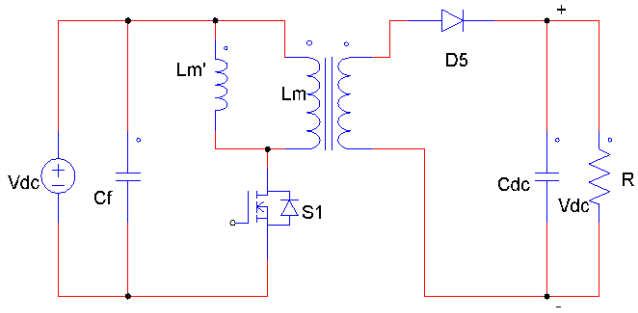

Figure.5. Equivalent circuit of high frequency isolated AC-DC flyback converter.

A. First Stage of operation

This first stage is defined by the on time t_{on} of the switch S1 and shown in Figure 5. In the first stage of converter operation, peak input current (i_{pk}) refer to secondary, for $0<t<t_{on}$ can be defined as:

$$i_{pk}=(v_{1r}\ D\ T_s)/(nL_m)\ (1)$$

Where n is turn ratio of the transformer, L_m is the fly back transformer magnetizing inductance referred to the secondary $(L_m = L'_m/n^2)$, D is the switch duty cycle, T_s is the switching period and v_{1r} is absolute value of sinusoidal input voltage $(v_{1r}=|v_s|=V_s|\sin\omega t|)$.

The converter average input current (i_{savg}) can be calculated from Figure 5 as:

$$i_{savg}=\frac{1}{T_s}\int_0^{T_s} i_s(t)dt$$

By solving eqn. (2) the average current can be given as:

$$i_{savg}=(D\ i_{pk})/(2n)\ (3)$$

By substituting eqn. (1) into eqn. (3) the average current Becomes as:

$$i_{savg}=v_{1r}/R_e\ (4)$$

$$\text{Where } R_e=(2n^2L_m)/(D^2T_s)\ (5)$$

The average current of the fly back converter obeys the ohm's law and effective resistance Re can be controllable by the variation of the duty cycle of the switch S1 as given in eqn.(5). The average output current (i_{avg}) of the converter can be computed as:

$$i_{avg}=\frac{1}{T_s}\int_0^{T_s} i_0(t)dt\ (6)$$

By solving eqn. (6) the average current (i_{avg}) can be given as:

$$i_{avg}=(D^2\ i_{pk})/2\ (7)$$

Where D_2 is on time duty ratio (t_{don}/T_s) of the diode. The Diode duty ratio D_2 can be calculated by solving for time $(D+D_2)T_S$ At which the magnetizing current reaches zero as:

$$D_2=D\{v_{1r}/(nv_{dc})\}\ (8)$$

Where v_{dc} $(v_{dc}=v'_{dc}/n)$ is voltage of the DC-link.

By substituting eqns. (1), (5), and (8) into eqn. (7) and by Rearranging the terms the average power is calculated as:

$$i_{avg}\ v_{dc}=v_{1r}{}^2/R_e\ (9)$$

The obtained average power is equal to the power consumed by the converter at input side [10].

B. Second Stage of operation

This second stage is defined by the diode on time t_{don} of the diode (D_5) and shown in Figure 5. It is found that the fly back converter operates as a perfect power factor preregulator (PFP) in the DCM provided that the fly back magnetizing inductance current ceases to zero before the end of switching period Ts. This is represented as:

$$D_2<(1-D)\ (10)$$

$$\text{Where } D_2=D\{v_{1r}/(nv_{dc})\}<1\ (11)$$

In the eqn. (11) the switch duty ratio 'D', output voltage 'v_{dc}' and turns ratio of transformer 'n', all presumed constant. The input rectified sine wave voltage 'v1r' varies between '0' and 'Vs'. The necessary condition for flyback converter operation in DCM can be given as:

$$D<1/\{1+(V_s/(nv_{dc})\} \quad (12)$$

For power balance condition of the converter operation input power can be equated to output power as:

$$v_{1r}^2/R_e=v_{dc}^2/R \quad (13)$$

From above eqn. (13) the output voltage can be calculated as:

$$v_{dc}=v_{1r}\sqrt{(R/R_e)} \quad (14)$$

Substituting value of Re from eqn.(5) eqn. (14) can be further simplified as:

$$v_{dc}=v_{1r}(D/n)\sqrt{\{RT_s/(2L_m)\}} \quad (15)$$

Therefore the duty ratio 'D' of the switch can be given as:

$$D=(nv_{dc}/v_{1r})\sqrt{(2K)} \quad (16)$$

$$\text{Where } K=(2L_m/RT_s) \quad (17)$$

Equating eqn. (12) and eqn.(17) and using peak value of Rectified sinusoidal input voltage $v_{1r}=V_s$, solution for 'K' can be given as:

$$K<K_{crit}=1/[2\{1+(nv_{dc}/V_s)\}^2] \quad (18)$$

and magnetizing inductance 'Lm' as:

$$L_m<L_{mcrit}=RT_s/[4\{1+(nv_{dc}/V_s)\}^2] \quad (19)$$

The extreme operating condition on the flyback converter is its operation with minimum value of load resistance 'R' and with minimum peak line voltage 'Vs'. Therefore the critical value of magnetizing inductance of the high frequency transformer 'L_m' referred to secondary side must satisfy the relation as:

$$L_m<L_{mcrit}=R_{min}\ T_s/[4\{1+(nv_{dc}/V_s)\}^2] \quad (20)[10]$$

C. Selection of Output DC Capacitive filter

The value of output capacitance (C_{dc}) is selected on the basis of peak-to-peak ripple contents allowed in the DC link voltage. The output capacitor is selected as:

$$C_{dc}=1/(2\omega r_v R) \quad (21)$$

Where ω is angular frequency of line voltage, r_v is p.u. ripple contents allowed in DC-link voltage and R is equivalent load resistance ($=v^2_{dc}/P_{out}$). [10]

IV. MODELLING OF THE DRIVE SYSTEM

The high frequency isolated AC-DC fly back converter feeding the variable speed vector controlled-PMSM drive system. This whole system is model in following ways.

A. Modeling of high frequency isolated AC-DC flyback converter

In this system supply is given to the diode bridge circuit and then given to flyback converter. Here for MOSFET is used for switching device which control the output voltage of fly back converter. The output voltage of fly back converter(V_{dc}) is compared with reference voltage(V_{dc}^*). The error of this comparison gives to the PI voltage control which controls the integral and proportional gain. Then it compare with the triangular waveform by using the limiter and get Duty ratio of MOSFET. In this comparison following equation are used.

$$u_{ref}(n)=u_{ref}(n-1)+K_{pdc}\{V_{dce}(n)-V_{dce}(n-1)\}+K_{idc}V_{dce}(n)$$

Where, $u_{ref}(n)$ is the output of the voltage controller at nth sampling instant. $U_{ref}(n-1)$ is the output of the voltage controller at (n-1)th sampling instant. $V_{dce}(n)$ is error in dc-link voltage at nth sampling instant. K_{pdc} is proportional gain of the voltage controller and K_{idc} is integral gain of the voltage controller.

B. Modeling of Vector Controlled PMSM Drive System

Figure.4 shows the block diagram of the vector controlled PMSM drive system. It consists of control scheme with proportional plus integral (PI) speed controller, field weakening controller, d-axis current calculation, vector controller, Pulse Width Modulated (PWM) Current Controller (CC), voltage source inverter and PMSM.

1) PI speed controller: The input to the PI speed controller is the speed error $\omega_e(k)$ between reference speed ωr(k)* and the motor speed $\omega_r(k)$. This error is estimated at the kth sampling instant as:

$$\omega_e(k) = \omega_r(k)^* - \omega_r(k) \quad (24)$$

The error is processed in the PI speed controller and the output of the controller is given by the reference torque Tk^* at kth sampling instant as:

$$Tk^* = T(k-1)^* + K_p\{\omega_e(k) - \omega_e(k-1)\} + K_I\ \omega_e(k) \quad (25)$$

Where KP and KI are the proportional and integral gains of the PI speed controller, respectively. After limiting the output of the PI controller (Tk^*) is taken as reference torque (T_{ref}).

2) Reference winding current generation: The quadrature,
Direct axis and three-phase reference motor winding currents are generated using the output of the speed controller and the rotor position. The following are the equations for the reference currents [4]:
The flux component of reference stator current (i_d^*) can be defined as:

$$i_d^* = 0 \ for\ \omega_r < \omega_b\ and$$
$$i_d^* = \omega_f[\{\omega_b - \omega_r\}/\{\omega_r(L_d - L_q)\}]\ for\ \omega_r > \omega_b \quad (26)$$

The torque component of the reference stator current (i_d^*) can be obtained from reference torque (Tref) as:

$$i_q^* = T_{ref}^*/\{K_t(\omega_f + (Ld - Lq)\ i_d^*\} \quad (27)$$

Where Kt is motor torque constant, Ld and Lq are q-axis and d-axis inductances and φ_f is the flux produced by rotor magnets of PMSM. The reference three-phase currents for the stator winding can be represented as:

$$i_a^* = i_d^* \cos\theta_r - i_q^* \sin\theta_r \quad (28)$$
$$i_b^* = i_d^* \cos(\theta_r - 2\pi/3) - i_q^* \sin(\theta_r - 2\pi/3) \quad (29)$$
$$i_c^* = i_d^* \cos(\theta_r + 2\pi/3) - i_q^* \sin(\theta_r + 2\pi/3) \quad (30)$$

Where θ_r is the rotor angular position in electrical rad/sec.

These reference currents $(i_a^*\ i_b^*\ i_c^*)$ are compared with sensed winding currents $(i_a\ i_b\ i_c)$ and the current errors are fed to the PWM current controller.

3) PWM current controller: In the PWM current controller the instantaneous value of high frequency triangular carrier wave (10 kHz) is compared with the amplified current errors. For a phase 'A' if the amplified current error is more than the triangular carrier wave than the gating signal for upper switch of phase 'A' leg of three phase VSI is generated and switching function (SFA) for phase 'A' is set to one (SFA=1) otherwise the gating signal is generated for the lower switch of the same phase 'A' leg and switching function (SFA) is set to zero (SFA=0). Similar PWM controller outputs are generated for other two phases 'B' and 'C' respectively.

4) Modeling of PMSM: The stator of the PMSM consists of balanced three phase winding similar to the conventional synchronous motor. The mathematical model of PMSM is derived from the synchronous motor under the assumption
that the armature emf is induced by the permanent magnets in place of DC excitation. Assuming that the induced emf is sinusoidal and eddy current and hysteresis losses are negligible. The stator voltage equations in the rotor reference frame are given as [4]:

$$v_q = R_s i_q + p\varphi_q + \omega_r\ \varphi_d \quad (31)$$
$$v_d = R_s i_d + p\varphi_d - \omega_r\ \varphi_q \quad (32)$$

Where $\varphi_q = L_q i_q$ and $\varphi_d = L_d i_d + \varphi_f v_q$ and v_q are the d, q axis stator voltages. iq and id are the d, q axis stator currents. L_q And L_d are the d, q axis inductances. φ_f Is stator flux linkages produced by permanent magnets. R_s is stator-winding resistance per phase. ω_r is rotor speed in rad/sec (electrical). The developed electromagnetic torque is as [4]:

$$T_e = (3/2)\ (P/2)\ \{\varphi_f\ i_q + (L_d - L_q)\ i_d\ i_q\} \quad (33)$$ Where, P is the number of poles.

The electromagnetic torque is balanced by the load torque,
Accelerating torque and damping torque of the system and can be expressed in electromechanical equation as:

$$T_e = T_L + B\omega_r + Jp\omega_r \quad (34)$$

Where, T_L is the load torque, B is the damping coefficient and J is the moment of inertia.

The model equations of PMSM can be rearranged in the form of following first order differential equations as:

$$p\, i_d = (v_d - R_s\, id + \omega_r L_q\, i_q) / L_d \quad (35)$$

$$p\, i_q = (v_q - R_s\, iq - \omega_r L_d\, i_d - \omega_r \varphi_f) / L_q \quad (36)$$

$$p\, \omega_r = (T_e - T_L - B\, \omega_r) / J \quad (37)$$

$$p\omega_r = \omega_r \quad (38)$$

The phase currents of the motor can be reconstructed in terms of i_d and i_q by using the inverse Park transformation as:

$$i_a = i_d \cos\theta_r - i_q \sin\theta_r \quad (39)$$

$$i_b = i_d \cos(\theta_r - 2\pi/3) - i_q \sin(\theta_r - 2\pi/3) \quad (40)$$

$$i_c = i_d \cos(\theta_r - 4\pi/3) - i_q \sin(\theta_r - 4\pi/3) \quad (41)$$

Where angle θ_r is the position of the rotor.

5) Modeling of VSI: The VSI consists of insulated gate bipolar transistors (IGBTs): The inverter voltage can be given by following equations in terms of switching signals SFA, SFB and SFC and DC bus voltage, obtained from the current controlled pulse width modulator (CC-PWM) as:

$$v_a = (v_{dc}/3)(2\,SFA - SFB - SFC) \quad (42)$$

$$v_b = (v_{dc}/3)(2\,SFB - SFC - SFA) \quad (43)$$

$$v_c = (v_{dc}/3)(2SFC - SFA - SFB) \quad (44)$$

Where, SFA, SFB and SFC are switching functions (which are either one or zero). v_a v_b v_c and v_{dc} are voltages of phase winding a, b, c and DC link, respectively. These voltages can be expressed in rotor reference frame as the forcing functions v_d and v_q by using the Parks transformation as:

$$v_d = (2/3)(v_a\cos\theta_r + v_b\cos(\theta_r - 2\pi/3) + v_c\cos(\theta_r - 4\pi/3) \quad (45)$$

$$v_q = (-2/3)(v_a\sin\theta_r + v_b\sin(\theta_r - 2\pi/3) + v_c\sin(\theta_r - 4\pi/3) \quad (46)$$

These voltages vd and vq are forcing functions in the model of PMSM given in equations (35)-(36).

V. CONCLUSION

The simulation and analysis of AC-DC flyback converter in discontinuous current mode of operation with high frequency transformer isolation to feed the vector controlled PMSM drive implemented in PSIM software. The simulated result shows the low THD value at supply side with power factor improvement.

REFERENCES

[1] Bhim Singh, B.P. Singh, Sanjeet Dwivedi," Improved Power Quality AC-DC Flyback Converter for Variable Speed Permanent Magnet Synchronous Motor Drive" Dept. of Electrical Engineering, Indian Institute of Technology Delhi, 0-7803-9525-5/06/$20.00 ©2006 IEEE.

[2] S. Howimanporn, C. Bunlaksananusorn, "Performance Comparison of Continuous Conduction Mode (CCM) and Discontinuous Conduction Mode (DCM) Flyback Converter", in *Proc. IEEE PEDS'03,* 2003, pp.1434-1438.

[3] R. Erickson, M. Madigan and S. Singer, "Design of a Simple High-Power-Factor Rectifier Based on the Flyback Converter", *in Proc. IEEE APEC'90,* 1990, pp.792-801.

[4] R.Dhaouadi and N.Mohan, "Analysis of Current Regulated Voltage Source Inverters for Permanent Magnet Synchronous Motor Drives in Normal and Extended Speed Range", *IEEE Trans. on Energy Conversion*, vol.5, no.1, pp.137-144, March 1990.

[5] Sanjeev Singh, Bhim Singh, "Improved Power Quality Flyback Converter fed PMBLDCM Drive" IEEE 2012.

[6] Bhim Singh, Ganesh Dutt Chaturvedi,"Comparative Performance of Isolated Forward and Flyback AC-DC Converters for Low Power Applications" IEEE 2008.

[7] C. Larouci, J.P. Ferrieux, L. Gerbaud, J. Roudet and J. Barbaroux, "Control of a flyback converter in power factor correction mode: compromize between the current constraints and the transformer volume," in *Proc. IEEE APEC*, 2002, vol.2, pp. 722 – 727.

[8] B. Singh, S. Singh, A. Chandra and K. Al-Haddad, "Comprehensive Study of Single-Phase AC-DC Power Factor Corrected Converters with High Frequency Isolation," *IEEE Trans. Industrial Informatics* (TII), vol. 7, no. 4, pp. 540-556, Nov. 2011.

[9] P. Freere, P. Pillay, "Design And Evalution Of Current Controllers For PMSM Drives" 0879426004/90/1100-1193$01.00 *0* 1990 IEEE**.**

[10] Marian K. Kazimierczuk,"Pulse-width Modulated DC–DC Power Converters" *Wright State University Dayton, Ohio, USA@* 2008 John Wiley & Sons, Ltd.