Design and Fabrication of Miniaturized Diplexer for Antenna Applications

A.Anand
PG Scholar, Department of ECE
SSN College of Engineering, Kalavakkam – 603 110, Tamil Nadu, India
infanandra@gmail.com, info2aanand@gmail.com

***Abstract* - there is a growing need of microwave systems to meet the emerging communication challenges with respect to reduction in size, cost and performances. This paper presents the design of miniaturized diplexer for antenna applications. The diplexer is a combination of two filters, Lowpass filter (LPF) (700-960MHz) and Bandpass filter (BPF) (1.5-2.5GHz). It is used for combining and splitting RF fees, so they can be used by multiple receivers and possibly on different frequencies. The ADS Simulation tool is used to design the filters. The simulation results shows that the filter works on 900MHz (LPF) and 2GHz (BPF) at the center frequency. Compared to other filter design types, this design works very well in recent challenges.**

***Index Terms* - Diplexer,Lowpass filter, Bandpassfilter, microstrip, dielectric constant,fractional bandwidth, diplexer, substrate, insertion loss, return loss.**

I.INTRODUCTION

A Diplexer is a three port network that splits the incoming signal on one end and directs it through two outputs to different lines, dependent on frequency. A diplexer is the simplest form of a multiplexer, which can split the signals from one common port into many different paths. There are no of ways to design a diplexer which involves use of filters. In this way, the route for the different transmitters and receivers can be divided, according to the frequency they use.[1]

The simplest way to implement a diplexer is to use a lowpass and highpass filter. In this work, bandpass filter is used instead of highpass filter. In this way, the diplexer routes all signals at frequencies below the cut-off frequency of the lowpass filter to one port, and signals containing band of frequencies not adjacent to zero frequency, such signals that comes out of a bandpass filter to another port. There is no path connection between the filters. All the signals that can pass through the lowpass filter will not be able to pass through bandpass filter and inversely.

When designing a diplexer, number of parameters must be studied. One is the degree of isolation required between two ports for low and high frequency transmitter/receiver. If the diplexer is to be used entirely for transmitting, then the requirements of high level of isolation is not so high. Comparatively each filter give enough isolation to protect each receiver with perfect impedance and the signalsare routed for correct input without any perceptible losses.[1]

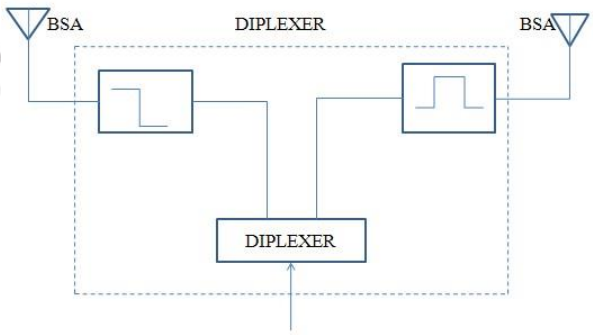

Fig.1 Block diagram for diplexer

Return loss and insertion loss are considered to be the performance measurement parameters for low frequency filter design. Our proposed work focuses on the design of miniaturized diplexer for antenna applications.

Diplexer is widely used in communication systems to transmit radio signals through an antenna that could otherwise only handle a limited number of signals.It consists of array of coupled resonator structures. Each resonator has a direct ground connection at one end and grounded with capacitor at other end. Antenna diplexer is used in many broadcast applications allowing a single RF antenna to be used for more number of transmitters.[2]

The filter design frequency is chosen by radio frequency of audio and video signals for both the filtersand the simulation is done for different frequency using ADS simulation tool. The filter performance parameters are simulated in terms of insertion loss and return loss. Simulation results are represented in terms of S-parameters such as transmission coefficient (S_{12}) and reflection coefficient (S_{11}).

II. DESIGN METHODOLOGY

Conventional microstrip lowpass and bandpass filters such as stepped-impedance filter are widely used in many RF/microwave applications. In this proposed work,stepped-impedance filter type is used. In general design of microstrip lowpass filter involves two main steps. The first step in the design of microwave filter is to select a suitable approximation of the prototype model based on the specifications. Second is to calculate the order of the filter from the necessary roll off as per the given specifications.[3]

In general, the structure of stepped-impedance lowpass filter,uses a cascaded structure of alternating high and low transmission lines. The high impedance lines act as series inductors and the low impedance lines act as shunt capacitors.

Lowpass filter

Based on the design specifications given in Table I, prototype values are calculated for lowpass filter. Some theoretical design information must contribute to the microstrip lines, because the expression for inductance and capacitance depend upon both the characteristics impedance and length. By initially fixing the characteristic impedances based on high and low impedances lines by studying,

- Z0c<Z0<Z0L, where Z0C and Z0L indicates the characteristic impedances of low and high-impedance lines, appropriately and Z0 is the source impedance, which is commonly 50Ω for microstrip filters.
- Result of lower Z0C is the leading approximation of lumped-element capacitor.
- Result of higher Z0L is the leading approximation of lumped- element inductor.

Design Equations

Low pass prototype element values are given in Table II. A lowpass prototypewith a Chebyshev response is chosen. Using $g_0, g_1 \ldots g_3$, lumped element values for lowpass filter have been calculated. Whose elements values for the normalized cut-off ΩC=1.0. Using the element transformation it is explained, we have

Table 1 Design Specifications

Filter type	**Chebyshev**
Order of filter (n)	5
Center frequency (f_0)	900MHz
Substrate Thickness H	1.54mm
Dielectric constants (ε_r)	2.55
Conductor Thickness T	0.03mm

Table 2 Low Pass Prototype Element Values

Filter Order (n)	**g_0**	**g_1**	**g_2**	**g_3**	**g_4**	**g_5**	**g_6**
5	1	3.482	0.762	4.538	0.762	3.482	1

Using these prototype the lowpass filter design can be designed. This filter can be act as miniaturized lowpass filter i.e., designing a filter itself they can be miniaturize by means of low frequency(900MHz) values for the filter. The filter performance can be act as more than -10dB range for S12 and less than -0.5dB for S11 range.

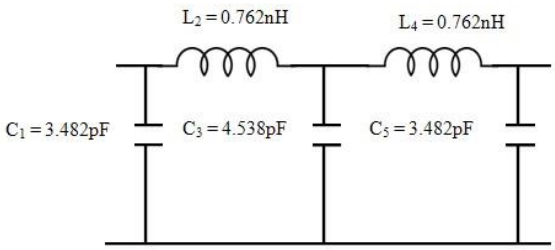

Fig.2 Circuit diagram for Lowpass filter

Fig.2 shows the desired filter structure using discrete components and fig.4 layout shows the structure of stepped-impedance filter. Our next step is to determine the physical structure of these section so that it can be definitely act as resistors, inductors and capacitors. For this type Butterworth design, the equation is given by(1)and (2) used in[4],

$$\beta l_n(ind) = \frac{L_n R_0}{Z_{high}} \qquad (1)$$

$$\beta l_n(cap) = \frac{C_n Z_{low}}{R_0} \qquad (2)$$

We now computethe values of the effective dielectric constant of the substrate materials using above equations. Thus next we compute the values λ_g and β.

$$\beta = \frac{2\Pi}{\lambda_g} \qquad (3)$$

$$\lambda_g = \frac{\lambda}{\sqrt{\xi_{reff}}} \qquad (4)$$

$$\xi_{reff} = \frac{\xi_{r+1}}{2} + \frac{\xi_{r-1}}{2\sqrt{1+12x}} \qquad (5)$$

The values of β from the above equations, which gives

$$l_n(ind) = \frac{\beta l_n}{\beta} \qquad (6)$$

$$l_n(cap) = \frac{g_n}{\beta} \qquad (7)$$

By using these equations we find corresponding L and C values.

Table 3Calculated Values For L And C

Prototype element values	**Corresponding L and C values**
g1=g5=3.482	L1=L5=0.6964
g2=g4=0.762	C2=C4=0.254
g3=4.538	L3=0.9037

By substituting all these L and C values in the network design, we have,

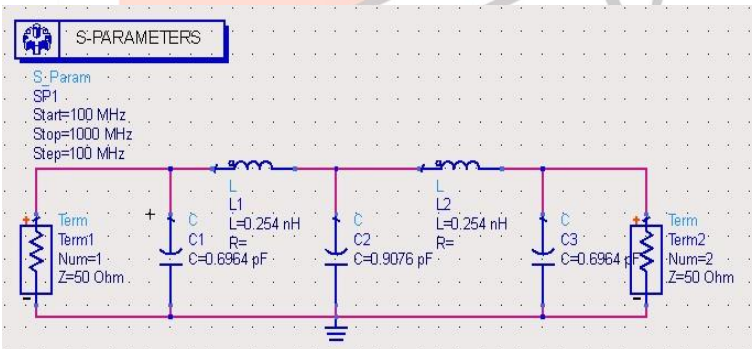

Fig.3 Schematic circuit diagram for lowpass filter using lumped components

From above these equations and lowpass prototype elements to found out schematic circuit diagram for general circuit. By using this corresponding width and length values the general layout can be designed.

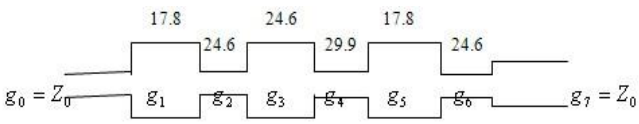

Fig.4 Layout structure of stepped-impedance lowpass filter

For the above schematic, the layout can be given as follows,

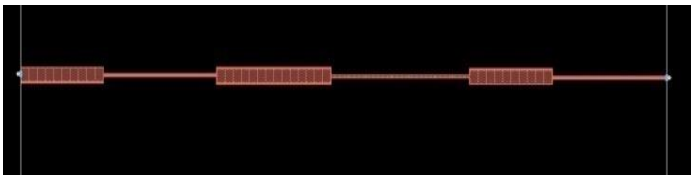

Fig.5 Layout structure using ADS tool

The filter design is then optimized with respect to its length to obtain the desired cut-off characteristics. Thus the filterperformance is minimized compare with length andwidthofthe layout.

Thus the filter performance is some ideal stage and we get sharpest attenuation of -25dB. Using this stepped-impedance type and cut-off frequency of 900MHz applications to personal mobility and mobile terminologies. Hence the filter allows to pass the frequencies less than 900MHz and rejects those frequencies more that that.

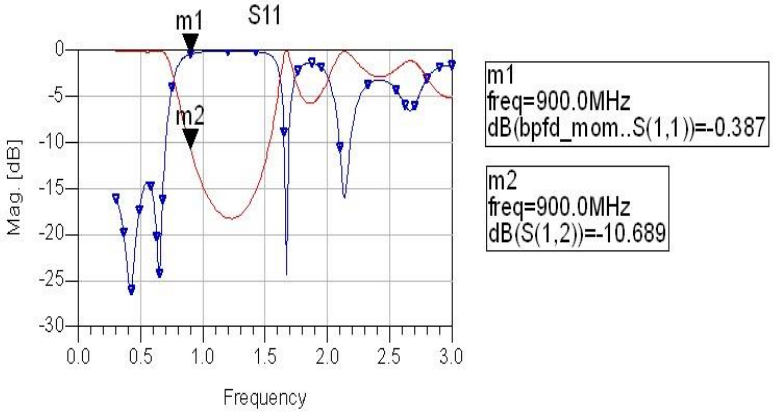

Fig.6 Performance of the lowpass filter

Bandpass filter

Bandpass filter is a passive component, which is able to allow a certain range of frequency and rejects the frequency in another region. It can reduce the transmitters, harmonic and spurious emission and it improve the rejection of interference for receivers. Microstrip line is a well platform for designing a filter, due to its advantages of light weight, low cost, compact size and it is ease of integration with other components on a single PC board. In this work, we have designed a bandpass filter for antenna applications using microstrip line for 2GHz. Our main aim is to achieve high accuracy in obtaining the required designed parameters(like Insertion loss, return loss and center frequency). The designed and simulation are performed using ADS simulation and response of the filter is also verify by using Network Analyzer. used in[1],[5],[8]

Table4Design Specifications

Filter Type	**Chebyshev**
Order of filter(n)	3
Upper Cutoff frequency(f1)	1.5GHz
Lower cutoff frequency(f2)	2.5GHz
Ripple in passband	0.5
Dielectric constant(€r)	2.55

Table 5Prototype Values For Bandpass Filter

Filter order (n)	g_0	g_2	g_3	g_4
3	1	1.5963	1.0967	1.5963

The lumped values of the bandpass filter after frequency and impedance scaling are given by, used in[7]

$$L_1^{'} = \frac{L_1 Z_0}{\omega_0 \Delta} \quad (8)$$

$$L_2^{'} = \frac{\Delta Z_0}{\omega_0 \Delta} \quad (9)$$

$$L'_3 = \frac{L_3 Z_0}{\omega_0 \Delta} \tag{10}$$

$$C'_1 = \frac{\Delta}{\omega_0 L_1 Z_0} \tag{11}$$

$$C'_2 = \frac{C_2}{\omega_0 \Delta Z_0} \tag{12}$$

$$C'_3 = \frac{\Delta}{\omega_0 L_3 Z_0} \tag{13}$$

The following schematic circuit diagram for bandpass filter,

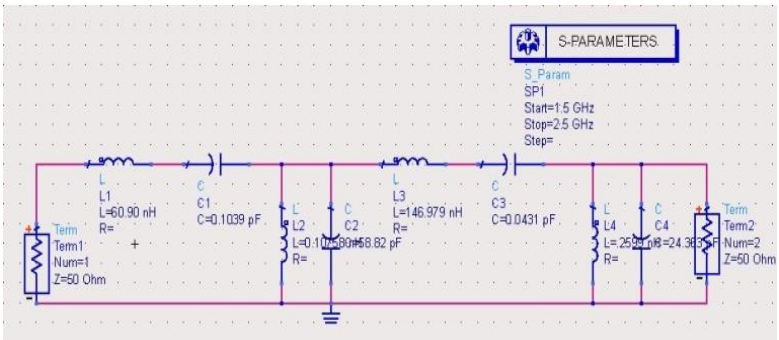

Fig.6 Schematic circuit diagram for Bandpass filter

From this above schematic circuit diagram the bandpass filter has been designed and plotted for 2GHz range.

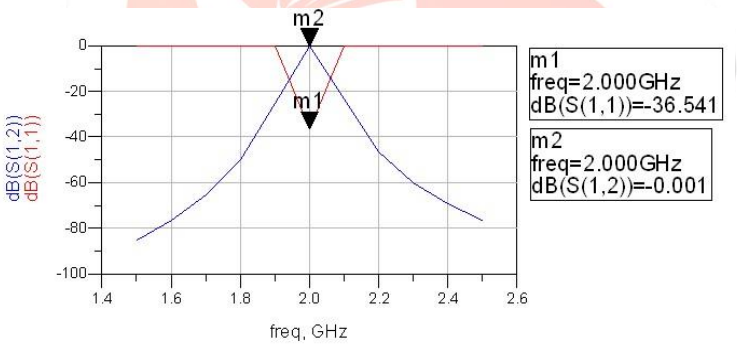

Fig.7 Schematic output for Bandpass filter

Design steps

The filter design steps are reported as:

1. We have started the design methods for bandpass filter with a three-pole (n=3) ladder type lowpass prototype (i.e., Chebyshev response) which is taken by the normalized value i.e., g_1, g_2, g_3.
2. The normalized values of the lowpass prototype filter transformed into L-C element for the source frequency 50Ω and mid band frequency f0.
3. The next main step is the design of microstripbandpass filter to find a appropriate filter realization.The filter is fabricated on a FR-4 substrate.
4. We use the following equations for designing a bandpass filter given by, the following equations used to calculate width and length as used in[5][8],

$$\left[Z_0 j_1 = \sqrt{\frac{\pi \Delta}{2 g_1}} \right] \tag{14}$$

$$Z_0 j_n = \frac{\pi \Delta}{2\sqrt{g_{N+1} g_N}} \tag{15}$$

$$Z_0 j_{N+1} = \sqrt{\frac{\pi\Delta}{2 g_N g_{N+1}}} \quad (16)$$

Where Δ=(ω2-ω1)/ω0
Z0 = characteristic impedance=50Ω

5. Then the values of odd and even mode impedances can be calculated as follows,

$$Z_{0e} = Z_0\left[1 + jZ_0 + (jZ_0)^2\right] \quad (17)$$
$$Z_{0o} = Z_0\left[1 - jZ_0 + (jZ_0)^2\right] \quad (18)$$

Calculate the even and odd mode impedance values Z_{0e} & Z_{0o} of the bandpass filter using the design procedure given above. Synthesize the physical parameters (Length & Width) for the microstrip lines for a substrate thickness of 1.54mm and a dielectric constant of 2.55.

6. Now using the single line equations to find out the (w/h)so and (w/h)se from Zoso and Zose,
For,
$\frac{w}{h} < 2$

$$\frac{w}{h} = \frac{8\exp(A)}{e^{2A} - 2} \quad (19)$$

Where,

$$A = \frac{Z_0}{60} \times \sqrt{\xi_{r+1}/2} + \frac{\xi_{r-1}}{\xi_{r+1}}\left(0.23 + \frac{0.11}{\xi_r}\right) \quad (20)$$

$$B = \frac{377\pi}{2Z_0\sqrt{\xi_r}} \quad (21)$$

(w/h)so and (w/h)se by applying Zoso and Zose as applying for making a single line microstrip equations.

7. Now it the point to specify the family of appropriate equations where it reach the w/h and s/h for the desired microstrip equations as following,

$$\frac{w}{h} = \frac{1}{\pi}\left[\cosh^{-1}\frac{1}{2}\left(\cosh\frac{\pi s}{2h}\right) - 1\right] + \left(\cosh^{\pi}{}_{s}\, 2h + \cosh^{\pi}\, 2whse^{-\pi} s2h\right) \quad (22)$$

$$\frac{s}{h} = \frac{2}{\pi}\cosh^{-1}\left[\frac{\cosh\left(\left(\frac{\pi}{2}\right)\left(\frac{\omega}{h}\right)se\right) + \cosh\left(\left(\frac{\pi}{2}\right)\left(\frac{\omega}{h}\right)so\right) - 2}{\cosh\left(\left(\frac{\pi}{2}\right)\left(\frac{\omega}{h}\right)so\right) - \cosh\left(\left(\frac{\pi}{2}\right)\left(\frac{\omega}{h}\right)se\right)}\right] \quad (23)$$

8. Effective dielectric constant is given by,

$$\beta = \frac{2\Pi}{\lambda_g} \quad (24)$$

$$\lambda_g = \frac{\lambda}{\sqrt{\xi_{reff}}} \quad (25)$$

$$\xi_{reff} = \frac{\xi_{r+1}}{2} + \frac{\xi_{r-1}}{2\sqrt{1+12x}} \quad (26)$$

Thus the length of the required microstrip is, $L = \frac{\lambda_g}{4}$ (27)

Table 6 Calculated Values Of Even And Odd Resistance

Stage	Z0o(ohm)	Z0e(ohm)
1	39.218658	70.675
2	38.307529	75.595
3	38.307529	75.595
4	39.218658	70.675

Table 7 Calculated Dimensions Of Transmission Line Section

Stage	W(mm)	S(mm)	L(mm)
1	3.3628	0.343694	27.7127
2	3.097349	0.248906	28.8645
3	3.097349	0.248906	28.8645
4	3.3628	0.343694	27.7127

A simulation was performed to verify the above dimensions in millimeter range. For this simulation purpose we used ADS simulation tool for verify and testing.

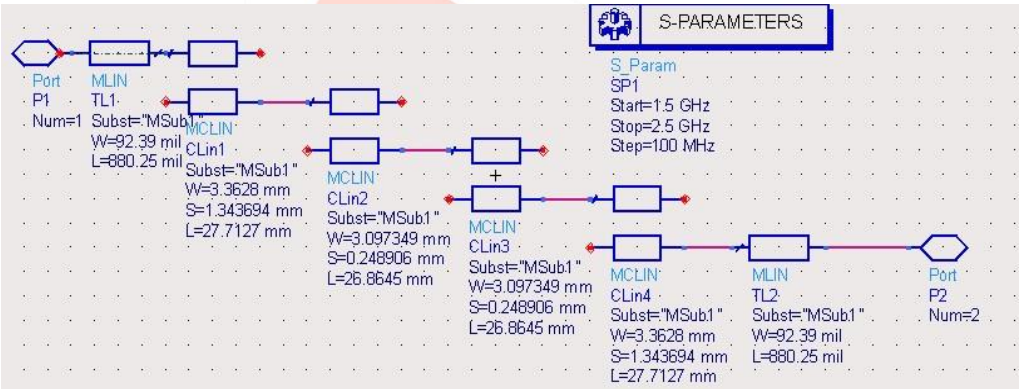

Fig.8 Schematic circuit diagram for bandpass filter using Microstrip lines

By using microstrip schematic circuit diagram need to change the structure using desired even and odd mode impedances.

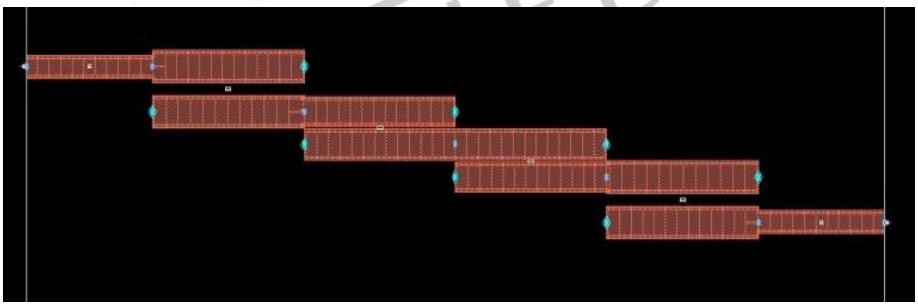

Fig.9 Layout filter structure for Bandpass filter

Finally, the performances of the filter is moderately miniaturize for 2GHz range its center frequency is 1.5GHz for this range we get S11 as more than -30dB and S12 as less than -0.5dB range.

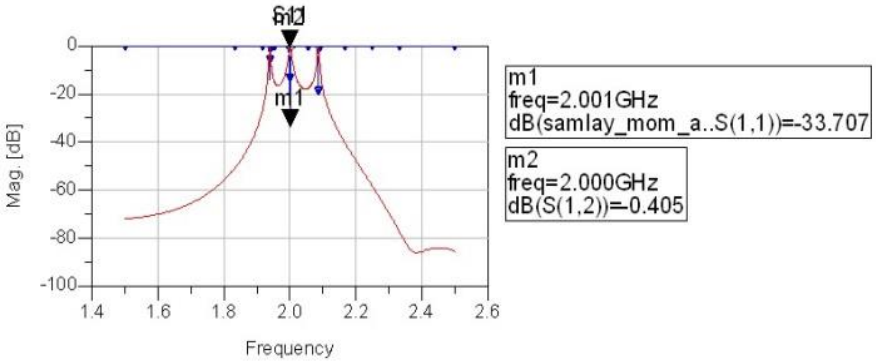

Fig.10 Performance of Bandpass filter

III.DESIGN AND SIMULATION RESULTS

ADS simulation tool is used to simulate the schematic and layout of micro strip filters for low frequency values used for antenna applications. The simulated results show that the return loss and insertion loss with higher dielectric constant gives better performance.

Our next step is to design a diplexer by using these two microstrip filters. By integrating these filters we make a miniaturized diplexer. The performance of integration testing is to verify functional, performances and reliability requirements placed on major design items.

Table 8 Diplexer Parameter

No	S-Parameter	Frequency(dB)
1	S11	-0.8,-0.5
2	S12	-66.581
3	S13	-10.794

Normally, a diplexer is a three port network. Here in this diplexer design we are created a three port network layout for different frequencies. Our main aim to design a miniaturized diplexer for mobile terminology and personal mobility. By integrating the filter itself it can perform like an antenna.

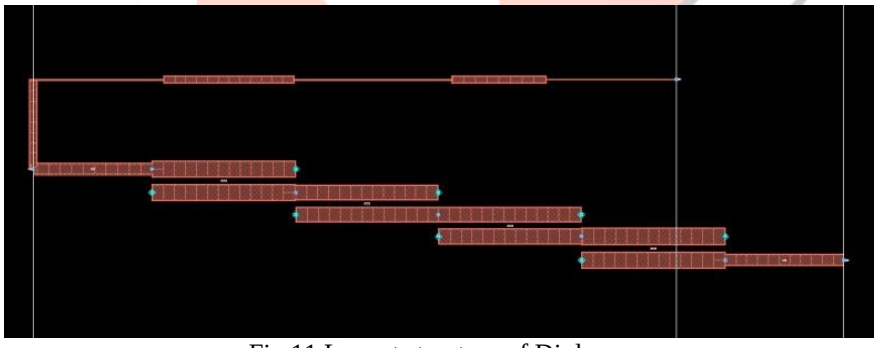

Fig.11 Layout structure of Diplexer

Finally, the miniaturized diplexer can be designed and modulated using ADS simulation tool. For diplexer the input and output port was relatively same i.e.,50Ω.

IV. CONCLUSION AND FUTURE WORK

The proposed work involves designing of miniaturized diplexer with high level of isolation. The miniaturized diplexer is designed by the integration of LPF(900MHz) and BPF(2GHz), where LPF and BPF separately acts as an miniaturized filter in many other applications. Thus the designed miniaturized diplexer acts as an antenna in the applications where it is used. The proposed circuit and layout was carefully implemented and the measured and simulated results are in favourable agreement.

The fabrication for the diplexer can also be done using FR-4 substrate with a thickness of 1.54mm, relative dielectric constant of 2.55 and 0.03mm loss of tangent . The fabrication of diplexer accounts to future modification.

REFERENCES

[1] www.microwave101.com/encyclopedia/diplexers.dfm

[2] Pu-Hua Deng, Jen-Tse Tsai, “Design of microwave Lowpass- Bandpass Diplexer,” IEEE microwave and wireless components letters, vol. 23, no.7, July 2013.

[3] K.Rajasekaran, J,Jayalakshmi, T. Jayasankar, "Design and analysis of stepped impedance microstrip lowpass filter using ADS simulation tool for wireless applications" International Journal of scientific and research publications, volume 3, Issue 8, August 2013.
[4] Jia-sheng Hong and M. J. Lancaster, "Microstrip filters for RF/Microwave Applications," John Wiley & sons, 2001.
[5] SayantikaBhattacharjee, Debabratapoddar, sandeepmukherjee, "Design of microstrip parallel coupled bandpass filter for global positioning system," Journal of engineering, computers & Applied science Volume 2, No.5, May 2013.
[6] D.Budimir and L.Athukorala, "Miniaturized filters and Diplexers for wireless Broadband communication systems," Wireless communication research group. 978-1-4244-2642-3/08/$25.00 16-20 Dec 2008.
[7] David M Pozar, "Microwave and RF design of wireless systems," John Wiley & sons, 2001.
[8] Matthaei, George. L., "Comblinebandpass filters of narrow or moderate bandwidth," The Microwave Journal, 1963.
[9] Annapurna Das and Sisir K Das, "Microwave Engineering," Tata McGraw Hill Education Private Limited, second edition,2009.