# On the use of CS-RZ in optical Ring Access Networks

[1]Sanjeev Verma, [2]Manisha Verma,[3]Ashu Verma
[1,2]Assistant Professor
[1]PG Department of Computer Science & Applications, [2]Department of Computer Science
[1]AS College, Khanna.[2]National College for Women, Machhiwara Sahib

---

***Abstract* - In this paper we communicate the use of advanced modulation format CS-RZ substituting conventional NRZ format. The use of CS-RZ over NRZ proves to give better quality in terms of Q factor, Received Power and Bit Error Rate. The communication also investigates the system for Ring circumference which comes out to be of double values using CS-RZ. This increment leads to fulfillment of capacity crisis and also helps in getting rid of trade-offs between data rate and link distance as the system Quality is found to be at par even at larger distances on 40 Gbps data rate.**

***Keywords* - CS-RZ, NRZ, OADM, Ring networks, access networks**

---

## I. INTRODUCTION

Ring networks for metropolitan area networks are a promising opportunity for handling dynamic traffic from Service Providers. These data-centric lofty bandwidth systems require maximum utilization of available infrastructure. To enable the maximum capacity limits of these telecommunication networks connecting the core segment to access segments various schemes have been proposed in literature. These suggestions from literature made various recommendations for capacity enhancement of these metro networks include use of DWDM, pulse width reduction schemes etc. These ring networks basically operate on modulated wavelengths form C and L band of optical Spectrum. These node wave lengths at different geographical locations are added and dropped from network ring using Optical Add Drop Multiplexer (OADM).

Various evaluations have been made in past for augmentation of capacity of ring networks in terms of operational Bit Rate, incrementing the circumference of network etc. The research in Past include comparison of carrying IP directly vs IP over ATM for SONETs, Bi-Di Line Switched Rings (BSLR), Mesh Networks of optical configurations using DWDMs. Optical cross connects etc[1]. Wayne Grover in [5] brought novelty with idea of ring to mesh evolution. C. Develder et al in [6] investigated optical packet switching in data and voice integration Numerous work has been reported in past for broadening the ring architecture to business access customers [7]. Then it came to 1*N wavelength selective switches in Reconfigurable optical Add/ Drop multiplexers which supported up to 40Gbpz of data transmission rates[9]. Then integer linear programs were introduced and approaches were made to solve routing and spectrum assignment problems in optical rings with elastic transceivers [14].

This paper is presented on use of advanced modulation format CS-RZ in WDM Ring networks. The proposed setup utilizes compressed Spectrum return to Zero modulation format in transmitter. This constant intensity scheme proves to provide better security and Quality at reception. It also augments the circumference of ring. Section II discusses the Simulation Setup and Section III provides results and discussions based on various plots made in terms of Q-Factor, Bit Error Rate, circumference of ring etc.

## II. SIMULATION SETUP

Simulation Setup of proposed ring is shown in Figure 1. Architecture is made to operate at 40Gbps.It consists for four similar nodes. Each node is capable of transmitting and receiving wavelengths using Optical Add Drop Multiplexers. The wavelengths used are modulated by CSRZ modulation format.CSRZ is a pseudo-multilevel modulation format. It is characterized by reversing the sign of the optical field at each bit transition. In contrast to the correlative coding formats like duobinary, the sign reversals occur at every bit transition, and are completely independent of the information-carrying part of the signal. Phase inversions between adjacent bits are achieved thus, on average, the optical field of half the 1-bits has positive sign, while the other half has negative sign, resulting in a zero-mean optical field envelope. As a consequence, the carrier at the optical center frequency is diminished.

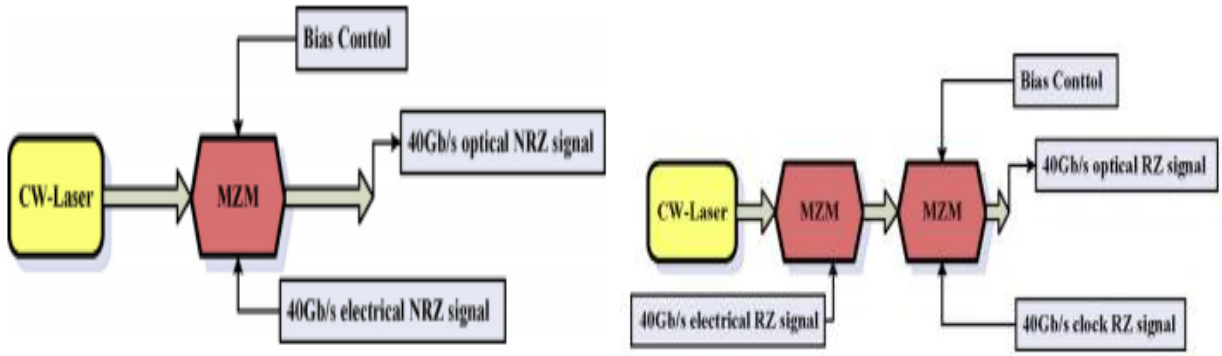

Figure 1: Generation of (a) NRZ Pulse (b) CS-RZ pulse

Since the optical phase in a CSRZ signal is periodic at half the data rate, the CSRZ spectrum exhibits characteristic tones at ±R/ 2. Block Diagram of NRZ and CSRZ generation is shown in figure 2(a) and (b) respectively.

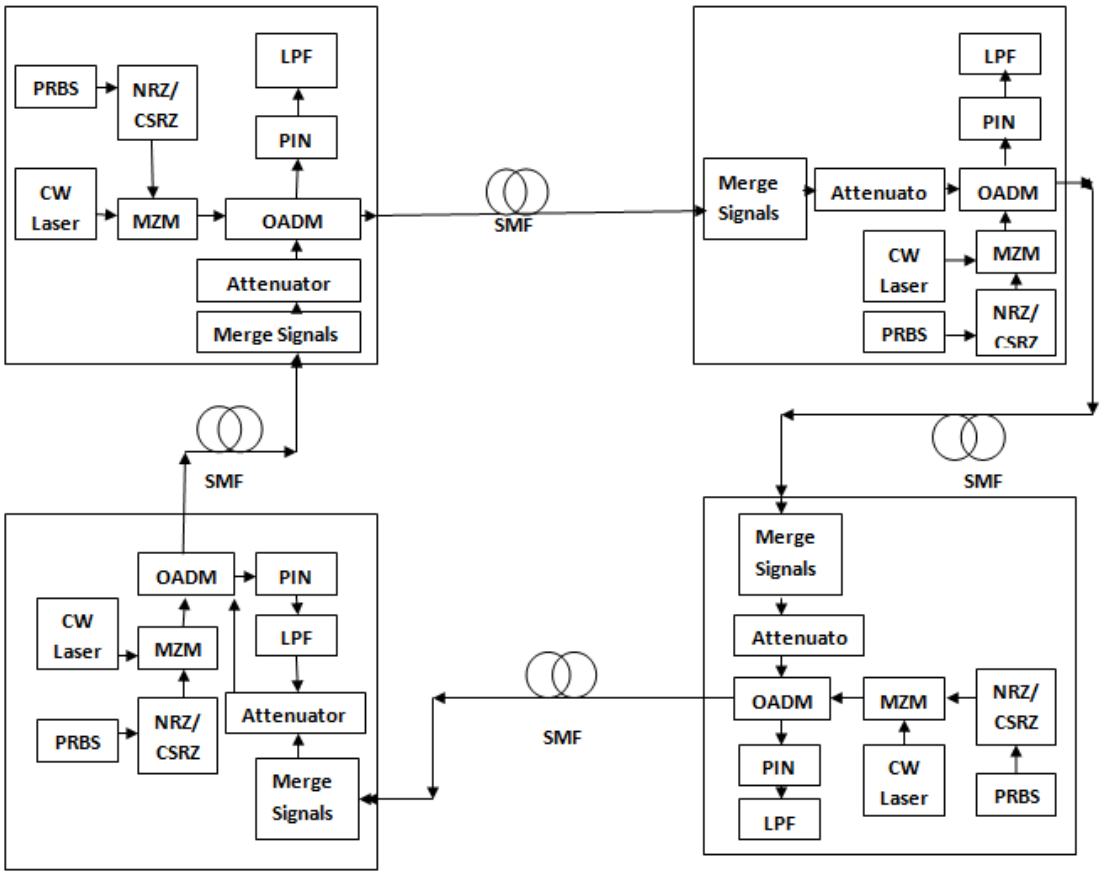


Figure 2: Simulation Setup of Proposed system

Thus generated CSRZ signal is the transmitted over Single mode fiber. The link distance between two consecutive nodes is 12.5Km, 15 Km and 20Km at different iterations. This signal is then received by next node in access network using PIN Photo Diode. After this optical to Electrical conversion the signal is then filtered using a Low Pass Bessel Filter.

## III. RESULTS AND DISCUSSION

The Simulations are done and results are taken in terms of Q- Factor and BER. The Eye Diagrams explore the quality of signal received from eye opening, timing Jitter etc. The Eye Diagrams of Ring Access Network utilizing CSRZ modulation Format is shown in Figure3. The plot in figure 4 shows the descending trend in Q-Factor when the circumference of ring is increased from 50 Km to 100 Km. Similarly the Plot in Figure 5 proves the probability of increment in error when the received power decreases.Figure.3. Represents the performance of NRZ and CSRZ in terms of Q-factor at varied ring circumference. It is clearly observed that with the increase of metropolitan ring circumference, Performance of the system degrades. Higher penalty of eye closer has been observed in case of NRZ at 80Km and 100Km ring circumference. Further the investigation of received power with BER has been done as shown in Fig.4.BER increase with the increased circumference and also penalty in received power has been reported.

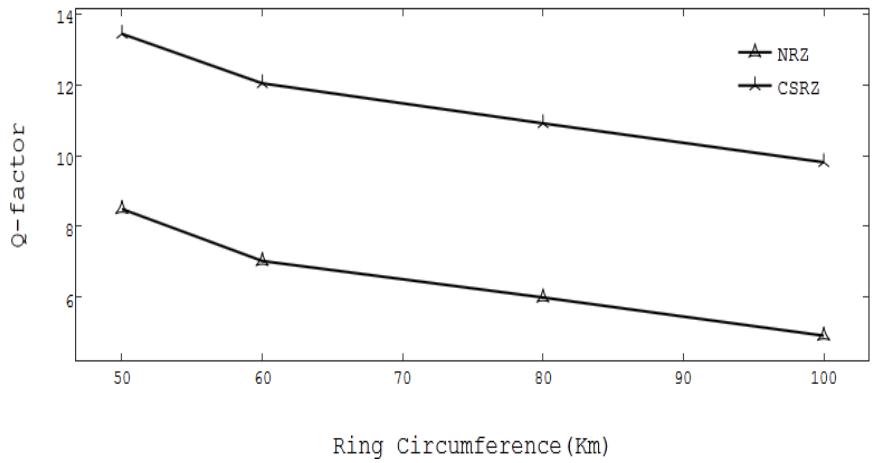


Figure3:Graphical representation of Ring circumference Vs Q-factor for NRZ and CSRZ

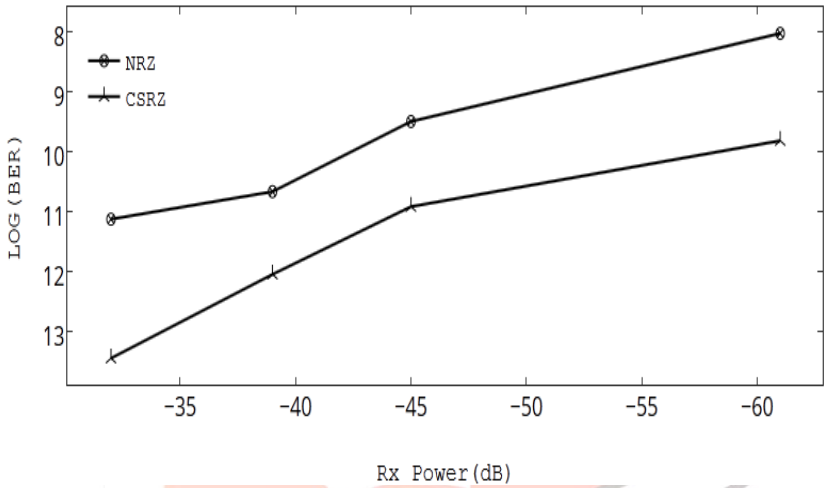


Figure4:Graphical representation of Received power Vs Log(BER) for NRZ and CSRZ

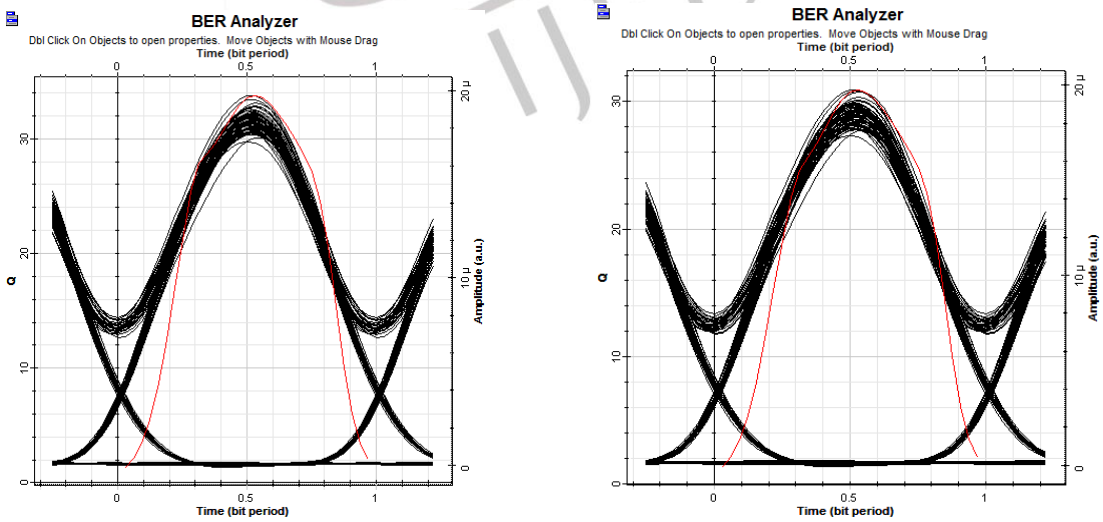


(a) (b)

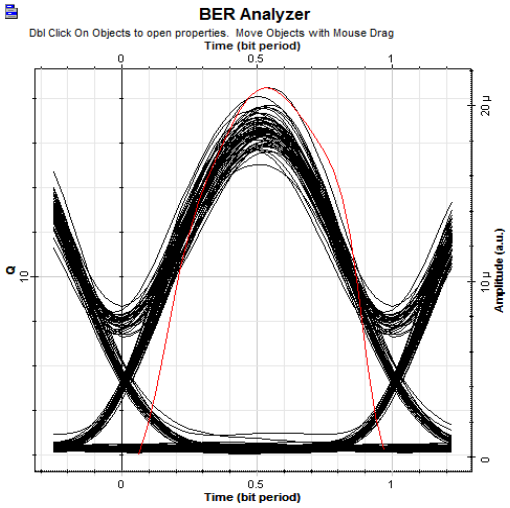


(c)

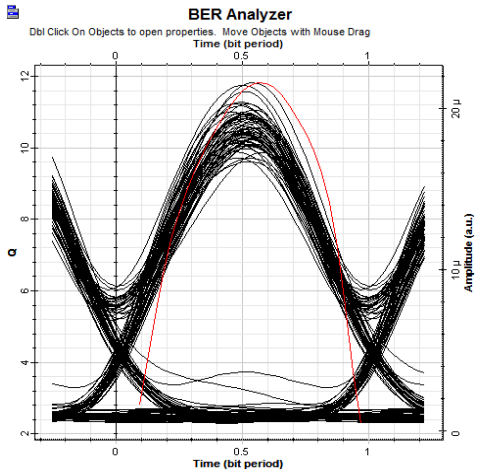


(d)

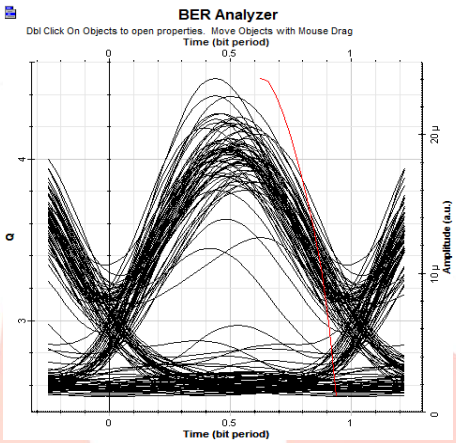


(e)

Figure.6:Evaluation of eye diagrams of CSRZ at Km (a)50 (b)60 (c) 80 (d) 100 (e) 120

## IV. CONCLUSION

The simulation is done and conclusions are drawn that CS-RZ can be recommended for use in Ring access networks as it provides better quality and received power with lower error probability. The proposed system is found to work efficiently at 40 Gbps meeting current standards and also the ring areas covered are more than 100 km. The comparisons verify the results amid NRZ and CS-RZ.

In Future, more such modulation formats can be used which provide more security, less error and are lesser prone to non-linear impairments in optical fibers.

## REFERENCES

[1] Bharat T. Doshi et al., "A Comparison of Next-Generation IP-Centric Transport Architectures", Vol. 4, pp- 63-85, 1998.
[2] K. Shrikhande et al, "HORNET: A packet-over-WDM multiple access metropolitan area ring network", IEEE press, Vol. 18, pp-2004-2016,2000.
[3] Muralikrishna Gandluru, "Optical Networking and Dense Wavelength Division Multiplexing (DWDM)", IEEE/ACM Transactions,Vol.6,pp-788-799,2000.
[4] Christophe S. Jelger et al, "Photonic Packet WDM Ring Networks Architecture & Performance", IEEE Communications Magazine,Vol.2,pp-110-115,2002.
[5] Wayne Grover et al, "New Options and Insights for Survivable Transport Networks" IEEE Conference Publications, pp- 34 41,2002.
[6] C. Develder et al., "Benchmarking and Viability Assessment of Optical Packet Switching for Metro Networks "IEEE Publications,pp-2435–2451,2004.
[7] Yihong Chen, Daniel Al-Salameh, "Performance of Wavelength Blockers in 80xlO Gb/s Metro Core Add-drop Network," Quantum Electronics and Laser Science Conference (QELS), pp-1726-1728,2005.
[8] E. B. Basch et al., "Architectural tradeoffs for reconfigurable dense wavelength-division multiplexing systems," IEEE, vol.12, pp-1-12,2006.
[9] Sorin Tibuleac and Mark Filer, "Transmission Impairments in DWDM Networks with Reconfigurable Optical Add-Drop Multiplexers" IEEE Journal of Light wave Technology, vol.28, pp- 557-568,2010.
[10] Abd El–Naser A. Mohammed et al.," Optical Add Drop Multiplexers with UW-DWDM Technique in Metro Optical Access

Communication Networks" International Journal of Computer Science and Telecommunications. , vol. 2, pp- 5-13,2011.
[11] Zhang et al,*"* Collision-Free Bandwidth-Variable Optical Burst Switching Ring Network", vol. 5, pp- 1043-1056, 2013.
[12] Can Tunca et al., "Ring Routing: An Energy-Efficient Routing Protocol for Wireless Sensor Networks with a Mobile Sink", vol.31,pp-1-15,2013.
[13] I-Fen Chao et al.," Toward Wireless Backhaul Using Circuit Emulation over Optical Packet-Switched Metro WDM Ring Network" IEEEJournal of Light wave Technology, vol. 31, pp- 3032-3042, 2013.
[14] Rottondi et al.," Routing, Modulation Level, and Spectrum Assignment in Optical Metro Ring Networks Using Elastic Transceivers" ,J. Optical Communication & Networking, ,vol 5, pp- 305-315, 2013.