Passive Optical Network for 256 users supporting Data/Audio/Video using carrier suppressed bit format

Sanjeev Verma

Assistant Professor
PG Department of Computer Science & Applications
AS College, Khanna (PB), India

***Abstract* – This paper evaluates performance of Gigabit Passive Optical Network (GPON) employing triple play services which are obtained as combination of voice, data and video signal. System performance is compared at various data rates and transmission distances. Acceptable simulation results are obtained in terms of Q Factor and BER at 15 Gbps for 256 users at 40 km of transmission distance. To make system more practical non linear results are also considered while performing simulation.**

***IndexTerms* – GPON, OLT, ONU, EDFA, APD**

I. INTRODUCTION

The increasing demand of bandwidth hungry applications is forcing researchers to concentrate more on higher speeds and large number of users in access networks. According to the developed applications, user demand increases every year making it vital for telecommunication companies to increase their network capacity which is important characteristic of broadband access network [1]. This inspired the researchers to employ Gigabit passive optical networks (GPON) [2]. In comparison with other broadband access technologies, passive optical network seems to be the best technique in solving and enhancing the bandwidth requirement of an access network [3]. Digital subscriber line (DSL) and modem based technologies are the first step in increasing the bandwidth of an access network. As compared to traditional dial up modem they increased the data rate of the system. The complexity of co-axial cable is high as compared to the passive optical networks (PON) due to the restricted bandwidth of cable. Fiber-to-the-home (FTTH) passive optical network helps in achieving larger transmission distance and higher data rate. Introducing passive optical network technology enhances the capability of FTTH architectures [4]. Passive optical networks (PON) in fiber to the home (FTTH) are now being deployed supporting triple play services. Basically, PON is point to multipoint architecture in which a central office is dedicated to provide access of various services to multiple users. Gigabit passive optical networks are current scenario in deployment and are now capable of offering large bandwidth along with very high split ratios. In past, various evaluations have been made for PON's using triple play services e.g. use of sub carrier multiplexing in WDM PON [5] Reflective filters add cyclic AWG were used where uplink downlink data was obtained using single optical source .Data rates were supported upto 1 Gb/s upto 10 Km link distance. [6] observed triple play services in a PON for 56 users at 2.5 Gb/s and boosted the distance upto 20 Km using EDFA as booster. Successful results were obtained for Data rate of 1 Gb/s for 10 km of fiber link. Evaluation was performed for different values of data rate from a Central Office (CO) in terms of BER (Bit Error Rate). J malhotra [7] evaluated performance of downstream link for triple play services . Link was of high capacity, long reach, and 32 channels. To ensure that FTTH system covers longer distance non linear fiber of 80 km was used with 20 km of reverse dispersion fiber to nullify the chromatic dispersion. S.singh [8] reported the performance of bidirectional passive optical network (BPON) for triple play service. Traffic was symmetric and acceptable value of Q factor was obtained at 10 Gbps. The Q-factor results showed the acceptable performance at10 Gbps data rate accommodating 128 users at distance of 40 km.

II. SIMULATION SETUP

Block diagram of simulation setup for GPON carrying triple play services for 256 users is shown in Fig.1. To differentiate between uplink and downlink signal in a single fiber a circulator is used. OLT modulates and multiplex signals over bidirectional fiber .It consist of data/voice and video signals as shown in Fig. 2. Data/voice is transmitted at wavelength of 1490 nm and video at 1550 nm. RF video transmitter consists of 2 signal generators, summer, external modulator and laser source tuned at 1550 nm having input power of 0 dbm. Data/voice signal is generated by using PRBS gen which generates different data rates. CSRZ modulator converts bits into electrical signals.MZM is used as an external modulator with extinction ratio of 30db.After Modulation video and data/voice signals are multiplexed and launched into fiber of length 40 km. 1:256 splitter is used divide signals between ONU's. Splitter used is ideal with default value of 0 db loss. ONU consist of filters and photodetector as shown in Fig.3. Optical filter is used to detect whether it is video or voice/data signal. APD photodetector is used for conversion of data and video into original form.BER analyzer is used to visualize eye diagram, Q Factor and BER. To generate uplink signal PRBS generator is used and laser source is tuned at 1300 nm. By using MZM modulator data is transmitted towards OLT.

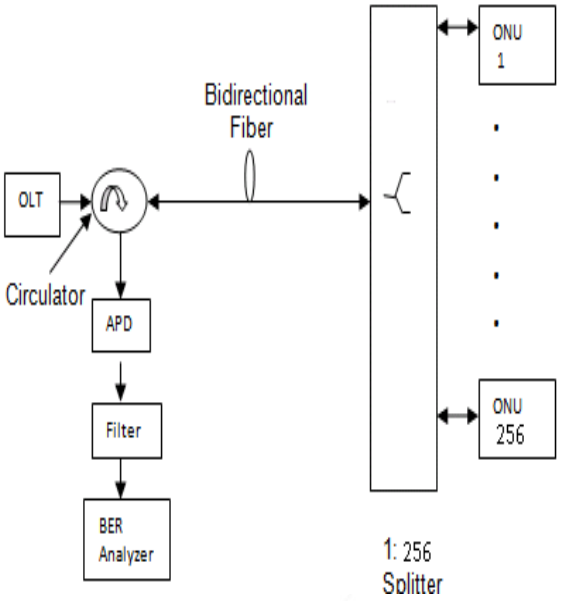

Figure.1 Proposed setup for 256 users for GPON

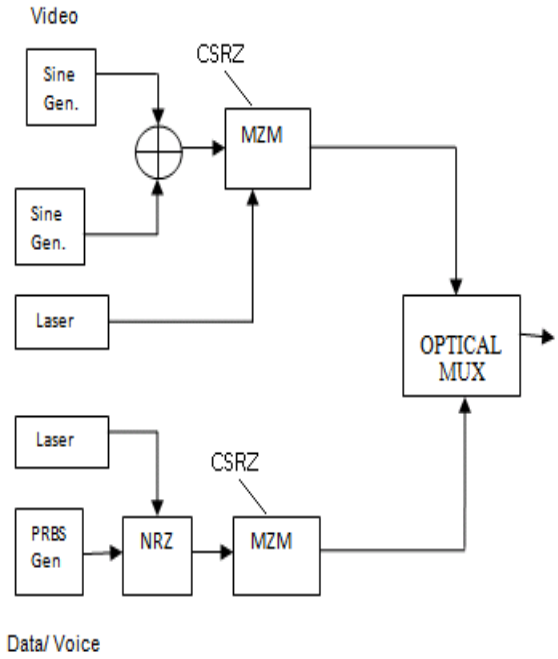

Figure.2 Internal structure of OLT

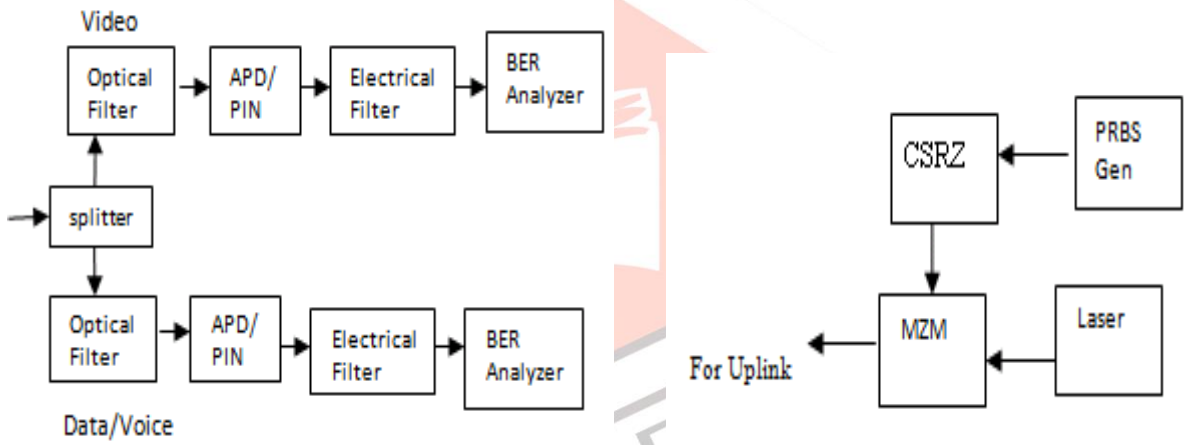

(a) (b)

Figure.3 Optical line terminal (a) receiver downlink (b) uplink transmitter

III. Results & Discussion

Data is transmitted at the wavelength of 1490 nm and the video is transmitted at the wavelength of 1550 nm. Fig.4(a). shows wavelength spectra of multiplexed data and video signal. When this multiplexed signal is transmitted over fiber, there is degradation in signal due to noise and non linearities of fiber which limits the distance and number of users covered. Graph for Q-Factor versus transmission distance for downlink is shown in Fig.4(b). Graph is obtained for 15 Gbps data rate for 64, 128 and 256 users. It is clearly shown that with increase in transmission distance Q Factor decreases. For instance Q factor is 15.27 and 9.09 at 30 km and 40 km respectively for 256 users at 15 Gbps. Similar graph for uplink is obtained and is shown in Fig.4(c). Acceptable value of Q factor 8.58 is obtained for 256 users at 15 Gbps at 40 km of transmission distance for uplink transmission.

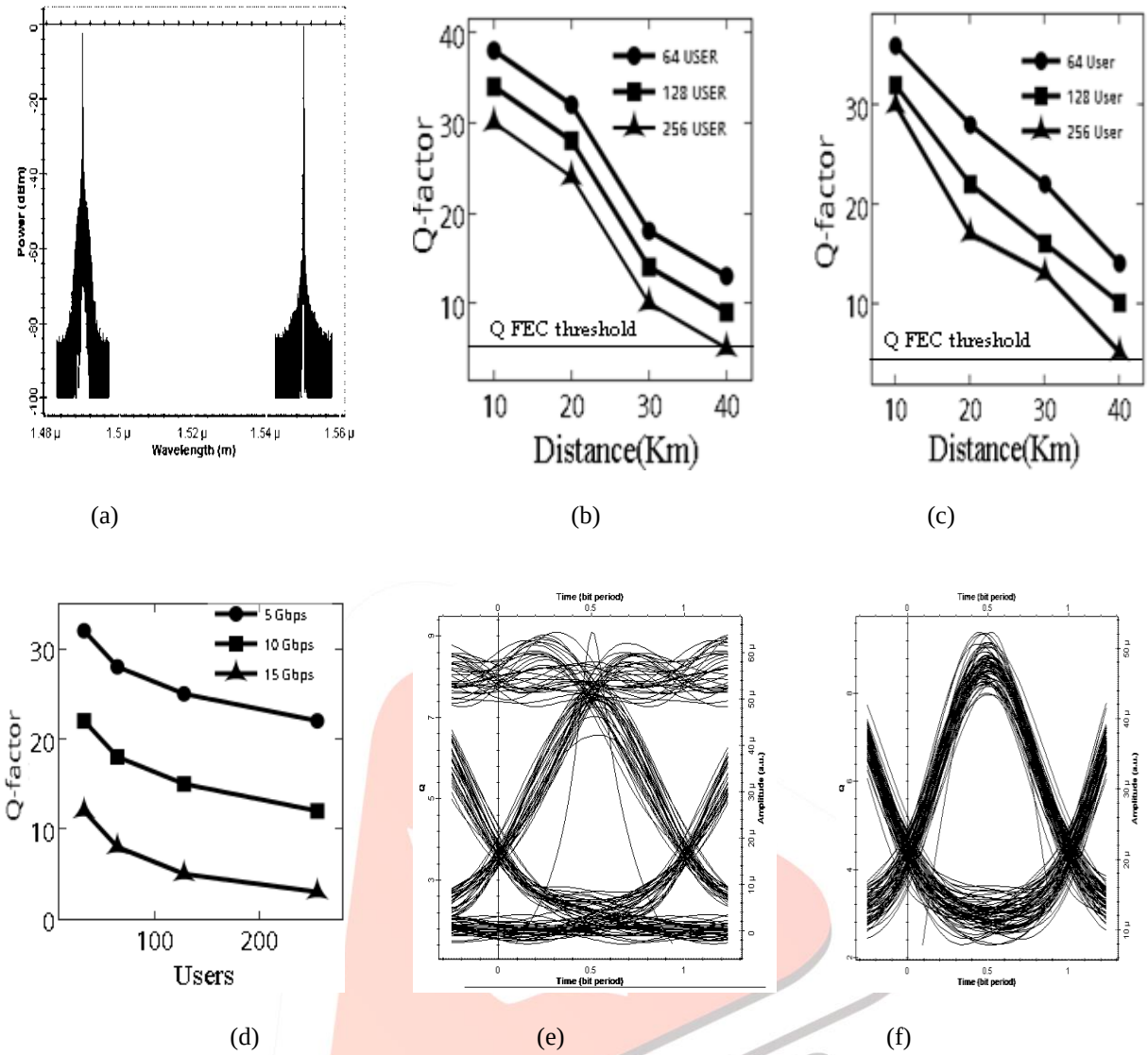

(a) (b) (c)

(d) (e) (f)

Figure.4 Graphical representation of (a) T-play at OSA (b) variation of quality with distance(downstream) (c) variation of quality with distance(upstream) (d) supported users at different data rates (Downstream) (e) eye diagram of audio signal (f) eye diagram of video signal

Fig.4(e). shows graph between Q Factor and number of users at different data rates at 40 km reach. It can be observe from graph that with increase in number of users Q factor decreases. Q fator for 64 users at 15 Gbps at 40 km of transmission distance is 11.09 while it is 9.09 for 128 users at same data rate which clearly indicates that with increase in number of users Q Factor reduces. Also there is reduction in Q factor with increase in data rate. Q Factor is 31.37 and 11.09 for 64 users at 5 Gbps and 15 Gbps respectively. So it can be concluded that Q Factor is inversely proportional to number of users and data rate. The eye diagram for downlink data/voice and video signal for 256 users at 15 Gbps at 40 km transmission distance is shown in Fig.4(e) and Fig.4(f) respectively.

IV. Conclusion

Performance of GPON employing triple play services (voice, data and video) is investigated for 256 users. Acceptable value of BER 2.21e-010 is obtained at 15 Gbps for 256 users at 40 km of transmission distance. It is observed that as distance and data rate of the system increased, there is degradation of signal reception. Use of CSRZ enhanced the system reach due to its anti dispersive properties. High Eye closer penalty and low OSNR has been reported for 15 Gbps at 40 Km supporting 256 users. However, system exhibit acceptable BER and performs well at 15Gbps.

References

[1] Xuejiao Ma,ChaoqinGan n, ShiqiDeng ,A novelcolorless WDM passive optical network delivering up/downstream signals and video broadcast signal simultaneously, Optical Switching and Networking 10 (2013) 100–105.

[2] Pedro Pereira, Tiago Ribeiro, João Vareda Delineating markets for bundles with consumer level data: The case of triple-play, International Journal of Industrial Organization 31 (2013) 760–773.

[3] S.-J. Park, C.-H. Lee, K.-T. Jeong, H.-J. Park, J.-G. Ahn, K.-H. Song, Fiber-to the-home services based on wavelength-division-multiplexing passive optical network, J. Lightwave Technol. 22 (2004) 2582–2591.

[4] S. Singh, R.S. Kaler, All optical wavelength converters based on cross phase modulation in SOA-MZI configuration, Optik-International Journal for Light and Electron Optics 118 (8) (2007) 390–394.
[5] Fady I. EL-Nahal, Abdel Hakeim M. Husein, Bidirecctional WDM- PON architecture using a reflective filter and a cyclic AWG, Optik 122(2011) 1776-1778.
[6] Deeksha Kochera, R.S. Kalera, Rajneesh Randhawa, Simulation of fiber to the home triple play services at 2 Gbit/s using GE-PON architecture for 56 ONUs, Optik 124 (2013) 5007– 5010.
[7] Jagjit Singh Malhotra, Manoj Kumar, Ajay K. Sharma, Performance optimization of high capacity long reach 32 channel FTTH downstream link employing triple play services, Optik 124 (2013) 2424– 2427.
[8] S. Singh, Performance evaluation of bi-directional passive optical networks in the scenario of triple play service, Optik 125 (2014) 5837–5841.